Option for TA-BL/P Series

DeviceNet & CANopen

Operating Manual and Set-up Instructions

TAE Antriebstechnik GmbH • Am Kappengraben 20 • D-61273 Wehrheim
Status 28.02.2003 V-4 EDeviceNet.PMD The German text applies in cases of doubt

TABLE OF CONTENT

1 Description DeviceNet and CANopen 3
1.1 Dip-switches (Setting Baudrate, enable and mode) 3
1.2 DeviceNet Connector Specification for Open-Style Connector 4
1.3 CANopen Connector Specification for D-Sub 9 pins 4
1.4 Setting device address 4
1.5 Termination 4
1.6 Status display 5
2 Communication DeviceNet 5
3 CANopen Parameter transfer 7
4 List of Parameters 8
4.1 Sorting after TAE Parameter-No. 8
4.2 Sorting after DeviceNet Parameter-No. 13
4.2 Sorting after Code/Attribut respectively CANopen Object Index 18

We reserve the right to correct technical and printing errors.

1 Description DeviceNet and CANopen

1.1 **Dip-switches** (Setting Baudrate, enable and mode)

The baudrate setting is done via the DIP switch on the DeviceNet / CANOpen board. The designated switch positions for the 3 possible baudrates of the DeviceNet and 9 possible baudrates of the CanOpen are as follows:

DIP 1	***DIP 2***			***DeviceNet*** *Baudrate*	***CanOpen*** *Baudrate*	***Remarks***
OFF	OFF			125 kBit/s		
ON	OFF			250 kBit/s		
OFF	ON			500 kBit/s		
DIP 3 to DIP 6				not used		must be OFF
DIP 1	***DIP 2***	***DIP 3***	***DIP 4***			
ON	OFF	OFF	OFF		10 kBit/s	
OFF	ON	OFF	OFF		20 kBit/s	Default
ON	ON	OFF	OFF		50 kBit/s	
OFF	OFF	ON	OFF		100 kBit/s	
ON	OFF	ON	OFF		125 kBit/s	
OFF	ON	ON	OFF		250 kBit/s	
ON	ON	ON	OFF		500 kBit/s	
OFF	OFF	OFF	ON		800 kBit/s	
ON	OFF	OFF	ON		1 MBit/s	
DIP 5 to DIP 6					not used	must be OFF
DIP 7						
ON				enabled	disabled	
OFF				disabled	enabled	
DIP 8						
ON				Program loading mode (Firmware program)		
OFF				Operational mode		

1.2 DeviceNet Connector Specification for Open-Style Connector

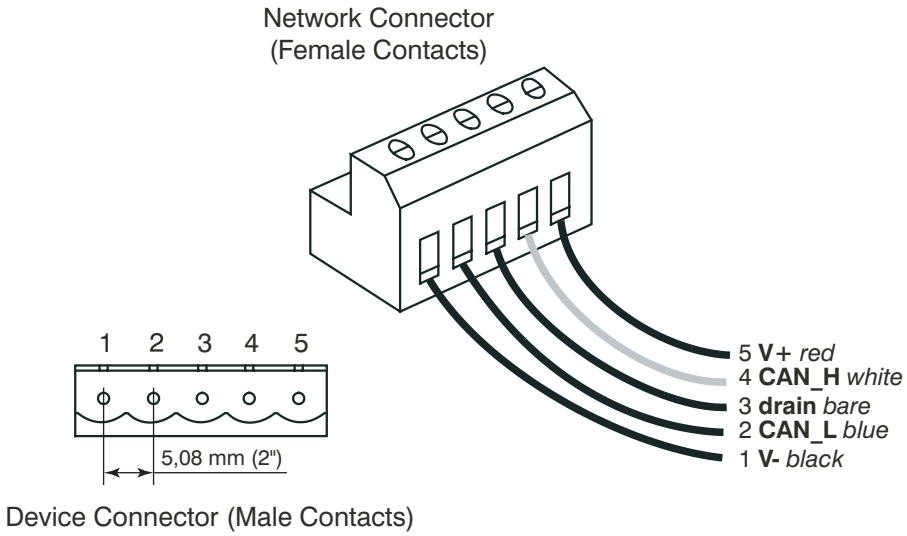

1.3 CANopen Connector Specification for D-Sub 9 pins

Network Connector
D-Sub 9 pins (Female)

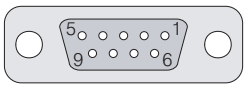

Device Connector
D-Sub 9 pins (Male)

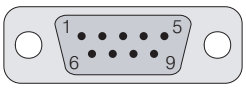

Gerätestecker Belegung:

1 =	Not connected	6 =	CAN GND
2 =	CAN Low	7 =	CAN High
3 =	CAN GND	8 =	Not connected
4 =	Not connected	9 =	Not connected
5 =	Not connected	Caseing = ground	

1.4 Setting device address

The address setting is done via the PG3000 control unit or the DriveAdministrator software with Parameter *4/06*.

1.5 Termination

For the CAN-junction termination a terminating resistance (121 Ω) can be connected via the red switch. The switch position to ON as shown on the picture connects the terminating resistance. (see picture)

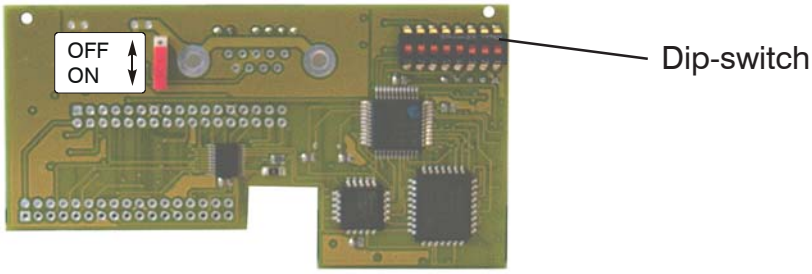

We reserve the right to correct technical and printing errors.

1.6 Status display

The status indicated by a bi-color LED. After switching-on an LED-test will be conducted, the LED flashes green first and then red. During normal operation the possible LED status can be as follows:

LED	*DeviceNet*
Green	Device operationel
Green flashing	Device standby, need commissioning
Red flashing	Transfer error
Red	Device error

LED	*CANopen*
Green flashing, slow	Pre-Operational
Green flashing, fast	Stopped
Green permanent light	Operational
Green-Red flashing	Bus-Warning / Bus-Off

2 Communication DeviceNet

The device communicates via Explicit-service or Poll-service. The parameters of the control-device are implemented as a manufacturer-specific object (ID 100, instance 1). The object attributes are numbered in the same way as the Profibus manual.

After „Power ON“ of the TA-BL/P the DeviceNet controller (optional card for TA-BL/P series) will put the adress of TAE-parameters which is found in parameter 3/56, 3/58, 3/60 and 3/62 to produce message and parameter 3/57, 3/59, 3/61 and 3/63 to consume message (default).

4 values per direction (Master/Slave) can be mapped in the Poll-service. The mapping adjustment is done via the corresponding connection-object.

In the polling communication system it is possible to send and receive 8 Bytes (Produce- and Consume-Message, together 16 Bytes). 16-Bit values can be transmitted, High-Byte and Low-Byte swapped according to the DeviceNet Specification. There are two ways to define these Produce- and Consume-Message.

1. The first possible and convenient way is to define through TAE-Drive Administrator or KeyPad.

   Remarks: In order to save the Parameters please use TAE Parameter Nr. 1/19
   Code = Attributes of TAE-Parameters (see Description DeviceNet Hardware)

   Example:

   1. Produce-Message, Status values (From TAE Controller to DeviceNet)

Attribute	TAE Parameter No.
-Code 82: Actual Motor Speed	3/56
-Code 84: Actual Current	3/58
-Code 88: Status 1	3/60
-Code 83: Status 2	3/62

   2. Consume-Message, Command values (From DeviceNet to TAE Controller)

Attribute	TAE Parameter No.
-Code 86: Command	3/57
-Code 68: Speed Value	3/59
-Code 56: Acceleration time A	3/61
-Code 58: Deceleration time A	3/63

   By default after power up these parameters will be loaded in the polling telegram packet.

2. The second possible way is to define through DeviceNet-Bus configurator. In order to change the Codes in the Produce-Message or Consume-Message use the manufacturer specific Object 101, Instance 1 with the followings attributes.

Attribute 1:	for Produce-Message,	Value 1
Attribute 2:	for Produce-Message,	Value 2
Attribute 3:	for Produce-Message,	Value 3
Attribute 4:	for Produce-Message,	Value 4
Attribute 5:	for Consume-Message,	Value 1
Attribute 6:	for Consume-Message,	Value 2
Attribute 7:	for Consume-Message,	Value 3
Attribute 8:	for Consume-Message,	Value 4

   Remarks: Attributes 1 to 8 are not attributes of TAE-Parameters

   For example:
   (Class Code) Object 101 -> Instance Number 1 -> Attribute Number 6 -> Value 2 = Code 87,
   (Class Code) Object 101 -> Instance Number 1 -> Attribute Number 7 -> Value 3 = Code 130
   (Class Code) Object 101 -> Instance Number 1 -> Attribute Number 8 -> Value 4 = Code 216

   Then the Consume-Message in the poll-service will have the following TAE-Parameters:

   -Code 86: Command,
   -Code 87: Pos-Command1,
   -Code 130: Ratio multiplier and
   -Code 216: Programmable Torque limit

   Remarks: Code = Attributes of TAE-Parameters (see Description DeviceNet Hardware)

We reserve the right to correct technical and printing errors.

3 CANopen Parameter transfer

The Parameter transfer is done by CANopen standards:

1. Explicit transfer
2. Mapping with CANopen Configurator (Master)
3. Default-Mapping
   The Default parameters (shown in table) in the device can be parameterized, which we are using like other bussystems for more than 6 years.

	Receive		Transmit	
	PDO1	**PDO2**	**PDO1**	**PDO2**
Parameter	3/57	3/65	3/56	3/64
	3/59	3/67	3/58	3/66
	3/61	3/69	3/60	3/68
	3/63	3/71	3/62	3/70

In this Parameters (3/56 - 3/71) the Adress of the Parameters, which are desired to be put in PDO-Mapping is defined (Attributs refer to the Parameter list). Then save these settings with Parameter 1/19 („1“ enter and confirm).

4 List of Parameters

4.1 Sorting after TAE Parameter-No.

Code/ Attribut	Data size	CANopen Object Index	Parameter-No. DeviceNet	TAE	Display	Parameter name	Value Range	Initial Value	at Firmware Version
82	WORD	2082	123	0/01	Speed	Actual Speed	0 - 9999	0 min^{-1}	300
84	WORD	2084	124	0/02	Curr	Actual Current 30000 ≙ 3000.0A	0 - 30000	0	300
79	WORD	2079	125	0/03	LSpd	Actual Line Speed	0 - 30000	0	300
95	WORD	2095	126	0/04	LSpd1	Actual Line Speed 30000 ≙ 3000.0	0 - 30000	0	300
96	WORD	2096	127	0/05	LSpd2	Actual Line Speed 30000 ≙ 300.00	0 - 30000	0	300
24	WORD	2024	128	0/06	PosLo	Actual Position (low)	0 - 65535	0	300
25	WORD	2025	129	0/07	PosHi	Actual Position (high) x65536	0 - 65535	0	300
27	WORD	2027	130	0/08	Lead	Leading Speed	0 - 9999	0 min^{-1}	300
37	WORD	2037	131	0/09	SW	Software Version	0 - 64000	0	300
40	WORD	2040	132	0/10	BusV	BusVoltage	0 - 9999	0 V	300
32	WORD	2032	147	0/11	ARVSP	Actual speed rated value	0 - 9999	0 min^{-1}	300
64	WORD	2064	31	1/02	MAXS	Maximum Speed	100 - 6000	1000 min^{-1}	300
66	WORD	2066	33	1/03	MINS	Minimum Speed	0 - 6000	0 min^{-1}	300
2	WORD	2002	1	1/04	PRST1	Preset Speed (or Ratio) 1	0 - 64000	0	300
3	WORD	2003	2	1/05	PRST2	Preset Speed (or Ratio) 2	0 - 64000	0	300
4	WORD	2004	3	1/06	PRST3	Preset Speed (or Ratio) 3	0 - 64000	0	300
60	WORD	2060	27	1/07	IL1Q	Current Limit 1st Quadrant (100 ≙ 10.0A)	1 - Imax [1)]	Imax [1)]	300
74	BIT 0		39	1/08	4Qen	4Q Operation Enabled	0 or 1	0	300
62	WORD	2062	29	1/09	IL4Q	Current Limit 4th Quadrant (100 ≙ 10.0A)	1 - Imax [1)]	Imax [1)]	300
48	WORD	2048	16	1/10	RAMP	Select Ramp Mode (Jump, Lin., s)	0 - 2	1	315
56	WORD	2056	23	1/11	ACCEL	Acceleration Time 5999 ≙ 599,9s	1 - 5999	100	300
58	WORD	2058	25	1/12	DECEL	Deceleration Time 5999 ≙ 599,9s	1 - 5999	100	300
74	BIT 5		39	1/13	LeaDe	Leaded Deceleration	0 or 1	1	300
74	BIT 4		39	1/14	BraDe	Wait With HOLD for 0.5s Using a Brake	0 or 1	0	300
74	BIT 6		39	1/15	DelOf	Turn Regulator off if Analog Input is 0	0 or 1	0	300
50	WORD	2050	17	1/16	P_AMP	Proportional Amplifier for Speed	0 - 100	3%	300
52	WORD	2052	19	1/17	I_AMP	Integral Amplifier for Speed	0 - 100	2%	300
47	WORD	2047	15	1/18	YI0P	Limit Integral Part for Speed	1 - 255	255 min^{-1}	300
76	BIT 1		41	1/19	Save	Save Parameter to EEPROM	0 or 1	0	300
76	BIT 2		41	2/02	Stdrd	Load Standard Parameter	0 or 1	0	300
166	WORD	2166	86	2/03	RATSP	Motor rated Speed (BL-N-motors lower Speed)	0 - 6000	0 min^{-1}	300
164	WORD	2164	84	2/04	POLES	Poles of Motor	2 - 32	0	300
72	WORD	2072	38	2/05	PPR	Pulses per Revolution x4	1 - 9999	0	300
160	WORD	2160	80	2/06	MRACU	Motor Rated Current 30000 ≙ 3000.0A	1 - 30000	0	300
161	WORD	2161	81	2/07	MPECU	Motor Peak Current (Limits IL1Q/IL4Q) 30000 ≙ 3000.0A	1 - 30000	0	300
67	WORD	2067	34	2/08	OCTIM	Over current time (for n < 300 rpm)	0 - 200	80 s	300
120	WORD	2120	55	2/09	SETAB	Select Ramp A or B	0 - 15	0	300
10	WORD	2010	8	2/10	ACC_B	Acceleration Time B 5999 ≙ 599.9s	1 - 5999	1800	300
11	WORD	2011	9	2/11	DEC_B	Deceleration Time B 5999 ≙ 599.9s	1 - 5999	1800	300
74	BIT E		39	2/12	PhAdv	Phase Advance	0 or 1	0	300
165	WORD	2165	85	2/13	PHADR	Phase Advance at Rated Speed	0 - 99	30%	300
167	WORD	2167	87	2/14	PHADM	Phase Advance at Max Speed	0 - 99	50%	300
135	WORD	2135	68	2/15	INCR	Speed + Increase Speed	0 - 9999	0	300
136	WORD	2136	69	2/16	DECR	Speed - Decrease Speed	0 - 9999	0	300
12	WORD	2012	10	2/17	FINE	Fine Adjustment, 1/4 RPM	0 - 3	0	300
59	WORD	2059	26	2/18	SWTR	Switch at this Speed	10 - 9999	100 min^{-1}	300
61	WORD	2061	28	2/19	IL20	Signalize Current Limit after this time (9999 ≙ 999.9s)	0 - 9999	1	300
74	BIT 7		39	2/20	CodO	Fixed Function for Digital Outputs	0 or 1	0	300
74	BIT 2		39	2/21	DirAn	Select Revers by Negative rated value	0 or 1	0	300
74	BIT A		39	2/22	4mA	Analoginput 1: 0-20mA / 4-20mA	0 or 1	0	300
54	WORD	2054	21	2/23	CLT1	Torque Limit Time Constant 30000 ≙ 300.00s	1 - 30000	1	321
63	WORD	2063	30	2/24	UVTIM	Undervoltage Time 30000 ≙ 3000.0s	0 - 30000	1	325
69	WORD	2069	36	2/25	OV_4Q	Overvoltage 4Q	100 - 1000	900V	325
216	WORD	2216	112	2/26	PTQL	Programable Torque limit 1000 ≙ 100.0%	0 - 1000	1000	412
219	WORD	2219	114	2/27	MPTUL	Motorpoti transmission limit (UP)	0 - 100	0%	414
220	WORD	2220	115	2/28	MPTDL	Motorpoti transmission limit (DOWN)	0 - 100	0%	414
224	WORD	2224	119	2/29	DEC_C	Deceleration Time C 5999 ≙ 599.9s	1 - 5999	1800	417
6	WORD	2006	4	2/30	PHMAX	Maximum rated-Position x10000	0 - 65535	0	417
7	WORD	2007	5	2/31	PLMAX	Maximum rated-Position x1	0 - 65535	0	417
8	WORD	2008	6	2/32	PHIGH	Rated-Position x10000	0 - 65535	0	417
9	WORD	2009	7	2/33	PLOW	Rated-Position x1	0 - 65535	0	417
221	WORD	2221	116	2/34	MPOSP	Position maximum speed	0 - 6000	100 min^{-1}	417

We reserve the right to correct technical and printing errors.

Sorting after TAE Parameter-No.

Code/ Attribut	Data size	CANopen Object Index	Parameter-No. DeviceNet	TAE	Display	Parameter name	Value Range	Initial Value	at Firmware Version
222	WORD	2222	117	2/35	WINPO	position window (pulses/revolution x4)	1 - 255	30	417
223	WORD	2223	118	2/36	KPP_P	proportional Amplifier for Positioning	0 - 255	75	417
225	WORD	2225	120	2/37	ADJBC	Adjust start of breaking curve 1000 ≙ 100.0s	1 - 1000	10	417
183	WORD	2183	100	3/02	SRES	Input Selection Reset	0 - 13	2	300
170	WORD	2170	89	3/03	SRUN	Input Selection Run	0 - 13	3	300
174	WORD	2174	92	3/04	SPRS1	Input Selection Preset 1	0 - 13	4	300
171	WORD	2171	90	3/05	SDIR	Input Selection Direction (Master)	0 - 13	5	300
172	WORD	2172	91	3/06	SHOLD	Input Selection Hold	0 - 13	6	300
175	WORD	2175	93	3/07	SPRS2	Input Selection Preset 2	0 - 13	7	300
178	WORD	2178	96	3/08	SMOT	Input Selection Motorpoti	0 - 13	8	300
176	WORD	2176	94	3/09	SUP	Input Selection Motorpoti Up	0 - 13	9	300
177	WORD	2177	95	3/10	SDOWN	Input Selection Motorpoti Down	0 - 13	10	300
180	WORD	2180	97	3/11	SINC	Input Selection Increase	0 - 13	11	300
181	WORD	2181	98	3/12	SDEC	Input Selection Decrease	0 - 13	12	300
182	WORD	2182	99	3/13	SSLAV	Input Selection Slave	0 - 13	13	300
184	WORD	2184	101	3/14	SSPER	Input Selection Suppress speed error	0 - 13	0	300
185	WORD	2185	102	3/15	SSYNC	Input Selection Synchron, Angle or Speed	0 - 13	1	300
189	WORD	2189	106	3/16	SANG	Input Selection Angle Correction	0 - 13	0	300
186	WORD	2186	103	3/17	SICW	Input Selection Inhibit cw	0 - 13	0	300
187	WORD	2187	104	3/18	SICCW	Input Selection Inhibit ccw	0 - 13	0	300
188	WORD	2188	105	3/19	SSETB	Input Selection Set Ramp B	0 - 13	0	300
190	WORD	2190	107	3/20	SLDIR	Input Selection Slave Direction	0 - 13	0	300
191	WORD	2191	108	3/21	STQL	Input Selection Torque limit	0 - 13	0	333
192	WORD	2192	109	3/22	SSER	Input Selection Set External Error	0 - 13	0	333
193	WORD	2193	110	3/23	SSDC	Input Selection Set Disable Controller	0 - 13	0	300
194	WORD	2194	111	3/24	STLAP	Input Selection T-Limit Ana/Prog	0 - 13	0	300
108	BIT 2		122	3/25	IPL2	Input Polarity TE. 2	0 or 1	1	300
108	BIT 3		122	3/26	IPL3	Input Polarity TE. 3	0 or 1	1	300
108	BIT 4		122	3/27	IPL4	Input Polarity TE. 4	0 or 1	1	300
108	BIT 5		122	3/28	IPL5	Input Polarity TE. 5	0 or 1	1	300
108	BIT 6		122	3/29	IPL6	Input Polarity TE. 6	0 or 1	1	300
108	BIT 7		122	3/30	IPL7	Input Polarity TE. 7	0 or 1	1	300
108	BIT 8		122	3/31	IPL8	Input Polarity TE. 8	0 or 1	1	300
108	BIT 9		122	3/32	IPL9	Input Polarity TE. 9	0 or 1	1	300
108	BIT A		122	3/33	IPL10	Input Polarity TE. 10	0 or 1	1	300
108	BIT B		122	3/34	IPL11	Input Polarity TE. 11	0 or 1	1	300
108	BIT C		122	3/35	IPL12	Input Polarity TE. 12	0 or 1	1	300
108	BIT D		122	3/36	IPL13	Input Polarity TE. 13	0 or 1	1	300
100	WORD	2100	50	3/37	SD48	Output Selection Terminal 48	0 - 13	4	300
102	WORD	2102	52	3/38	SD47	Output Selection Terminal 47	0 - 13	1	300
103	WORD	2103	53	3/39	SOK45	Output Selection Terminal 45	0 - 13	7	300
105	WORD	2105	54	3/40	SOK44	Output Selection Terminal 44	0 - 13	2	300
101	WORD	2101	51	3/41	SOK43	Output Selection Terminal 43	0 - 13	6	300
107	BIT 2		121	3/42	PD48	Output Polarity Te.48	0 or 1	1	300
107	BIT 4		121	3/43	PD47	Output Polarity Te.47	0 or 1	1	300
107	BIT 5		121	3/44	POK45	Output Polarity Te.45	0 or 1	1	300
107	BIT 6		121	3/45	POK44	Output Polarity Te.44	0 or 1	0	300
107	BIT 3		121	3/46	POK43	Output Polarity Te.43	0 or 1	1	300
121	WORD	2121	56	3/47	AOSEL	Source of Analog Output	0 - 15	1	300
122	WORD	2122	57	3/48	RSEL1	Src. of Ref. Value with Ramp	0 - 15	1	300
123	WORD	2123	58	3/49	RSEL2	Src. of Ref. Value without Ramp	0 - 15	0	300
124	WORD	2124	59	3/50	RSEL3	Rated value, Torque limit	0 - 15	0	300
125	WORD	2125	60	3/51	RSEL4	Source of Reference (Reserved)	0 - 15	0	300
126	WORD	2126	61	3/52	RSEL5	Source of Reference (Reserved)	0 - 15	0	300
127	WORD	2127	62	3/53	RSEL6	Source of Reference (Reserved)	0 - 15	0	300
74	BIT 3		39	3/54	TRQEN	Enable Torque regulation	0 or 1	0	402
74	BIT B		39	3/55	KLXEN	Motor Klixon active	0 or 1	0	402
200	BYTE 1	2200	-	3/56	PP0R	Profibus Parameter 0 read	0 - 255	0	402
201	BYTE 2	2201	-	3/57	PP0W	Profibus Parameter 0 write	0 - 255	0	402
202	BYTE 1	2202	-	3/58	PP1R	Profibus Parameter 1 read	0 - 255	0	402
203	BYTE 2	2203	-	3/59	PP1W	Profibus Parameter 1 write	0 - 255	0	402
204	BYTE 1	2204	-	3/60	PP2R	Profibus Parameter 2 read	0 - 255	0	402

Sorting after TAE Parameter-No.

Code/ Attribut	Data size	CANopen Object Index	Parameter-No. DeviceNet	TAE	Display	Parameter name	Value Range	Initial Value	at Firmware Version
205	BYTE 2	2205	-	3/61	PP2W	Profibus Parameter 2 write	0 - 255	0	402
206	BYTE 1	2206	-	3/62	PP3R	Profibus Parameter 3 read	0 - 255	0	402
207	BYTE 2	2207	-	3/63	PP3W	Profibus Parameter 3 write	0 - 255	0	402
208	BYTE 1	2208	-	3/64	PP4R	Profibus Parameter 4 read	0 - 255	0	402
209	BYTE 2	2209	-	3/65	PP4W	Profibus Parameter 4 write	0 - 255	0	402
210	BYTE 1	2210	-	3/66	PP5R	Profibus Parameter 5 read	0 - 255	0	402
211	BYTE 2	2211	-	3/67	PP5W	Profibus Parameter 5 write	0 - 255	0	402
212	BYTE 1	2212	-	3/68	PP6R	Profibus Parameter 6 read	0 - 255	0	402
213	BYTE 2	2213	-	3/69	PP6W	Profibus Parameter 6 write	0 - 255	0	402
214	BYTE 1	2214	-	3/70	PP7R	Profibus Parameter 7 read	0 - 255	0	402
215	BYTE 2	2215	-	3/71	PP7W	Profibus Parameter 7 write	0 - 255	0	402
74	BIT 1		39	3/72	CAOP1	Change analog output polarity	0 or 1	0	406
74	BIT 8		39	3/73	POSEN	Enable position sensor	0 or 1	0	406
217	BIT 8		113	3/74	STPOS	Go to 1st position (Command)	0 - 1	0	417
217	BIT 9		113	3/75	BRCUR	Type of Break curve Ramp/Scurve (Command)	0 - 1	0	417
217	BIT C		113	3/76	REPOS	Reset Position (Command)	0 - 1	0	417
217	BIT D		113	3/77	REFPO	Define direction of position (Command)	0 - 1	0	417
217	BIT E		113	3/78	GSPOS	Go to Start position (Command)	0 - 1	0	417
217	BIT 7		113	3/79	ENPOS	Enable positioning (Command)	0 - 1	0	417
217	BIT 5		113	3/80	INVCD	Invert Counter dir when Pos-Off (Command)	0 - 1	0	423
86	BIT 5		43	3/81	F_Jog	Dig. Speed Rated Value enable	0 - 1	0	417
53	WORD	2053	20	4/02	CFMAX	Maximum Current Frequency	500 - 18000	6500Hz	300
55	WORD	2055	22	4/03	CFMIN	Starting Current Frequency	300 - 2500	1000Hz	300
57	WORD	2057	24	4/04	CREND	Reaching Maximum Frequency here	100 - 800	300 min^{-1}	300
74	BIT C		39	4/05	Servo	Servo Mode	0 or 1	0	300
51	WORD	2051	18	4/06	ADR	Device Address for Ser. Interface	1 - 127	1	300
90	WORD	2090	45	4/07	PW_PA	Password for Changing of Parameters	0 - 999	0	300
91	WORD	2091	46	4/08	PW_CN	Password for Controlling from PG	0 - 999	111	300
92	WORD	2092	47	4/09	C_DSP	Select Continuous Display on PG	0 - 15	1	300
93	WORD	2093	48	4/10	B_DSP	Select Bargraph Display on PG	0 - 15	2	300
94	WORD	2094	49	4/11	DSP_F	Linespeed Factor/Motor Speed	1 - 9999	1000	300
130	WORD	2130	63	4/12	TRAN1	Transmission Factor n x Value	1 - 64000	1000	300
131	WORD	2131	64	4/13	TRAN2	Transmission Factor n / Value	1 - 64000	1000	300
75	BIT 4		40	4/14	Limit	Limiter (No Accumulation while IL)	0 or 1	1	300
75	BIT D		40	4/15	AB_CD	Signal AB or Clock/Direction	0 or 1	0	300
132	WORD	2132	65	4/16	ANCOR	Angle Adjustment	0 - 65535	0	300
133	WORD	2133	66	4/17	PPR_M	Pulses per Revolution of Master x4	1 - 9999	120	300
134	WORD	2134	67	4/18	KPSLV	Amp. of Sync. Velocity Regulator	0 - 100	1%	300
138	WORD	2138	71	4/19	KPAM	Amplifier of Master Accelleration	0 - 100	0	300
137	WORD	2137	70	4/20	SMOD	Select Slave Mode	0 - 2	1	300
162	WORD	2162	82	4/21	PULSE	Pulses to end position	1 - 64000	1	300
163	WORD	2163	83	4/22	CORR	Compensate Sensor Dead Time	0 - 9999	0	300
44	WORD	2044	14	5/02	ADJRC	Adjust Rated Current	1100 - 2000	1350	325
70	WORD	2070	37	5/03	RCUR	Rated Current (30000 ≙ 3000.0A)	20 - 30000	1000	300
168	WORD	2168	88	5/04	COBRE	Commutation Break	10 - 50	10	300
65	WORD	2065	32	5/05	LINE	Line Voltage	0 - 560	0V	311
42	WORD	2042	12	5/06	DEVTY	Device Type 3001≙ 300.1	1 - 20000	0	300
43	WORD	2043	13	5/07	SERNO	Series Number	100 - 65535	0	300
140	BYTE 1	2140	72	5/08	AI1OF	Offset of Analog Input 1	0 - 255	0	300
141	BYTE 2	2141	73	5/09	AI1GA	Gain of Analog Input 1	0 - 255	0	300
142	BYTE 1	2142	74	5/10	AI2OF	Offset of Analog Input 2	0 - 255	0	300
143	BYTE 2	2143	75	5/11	AI2GA	Gain of Analog Input 2	0 - 255	0	300
144	BYTE 1	2144	76	5/12	AO_OF	Offset of Analog Output	0 - 255	0	300
145	BYTE 2	2145	77	5/13	AO_GA	Gain of Analog Output	0 - 255	0	300
146	BYTE 1	2146	78	5/14	ID_OF	Offset of Current Display	0 - 255	0	300
147	BYTE 2	2147	79	5/15	ID_GA	Gain of Current Display	0 - 255	0	300
226	WORD	2226	-	5/16	AJTRC	Adjust Torque regulation curve	0 - 1000	10	422
36	WORD	2036	142	5/17	W_Hour	Workin Hours	0 - 65535	0h	300
217	WORD	2217	113	5/18	CONT2	Control2	0 - 65535	0	300
76	WORD	2076	41	5/19	ADR76	Command_Exec	0 - 65535	0	300
78	WORD	2078	42	5/20	ADR78	Dat-Command	0 - 65535	0	300
86	WORD	2086	43	5/21	ADR86	Command1	0 - 65535	0	300

We reserve the right to correct technical and printing errors.

Sorting after TAE Parameter-No.

Code/ Attribut	Data size	CANopen Object Index	Parameter-No. DeviceNet	TAE	Display	Parameter name	Value Range	Initial Value	at Firmware Version
87	WORD	2087	44	5/22	ADR87	Pos-Command	0 - 65535	0	300
81	BIT 1		134	8/02	Klix	Klixon, Overtemp. in Power Stage	0 or 1	0	300
81	BIT 2		134	8/03	OverV	Overvoltage	0 or 1	0	300
81	BIT 3		134	8/04	IGBTE	Error in Power Stage Transistor	0 or 1	0	300
81	BIT 4		134	8/05	UV	Undervoltage	0 or 1	0	300
81	BIT 5		134	8/06	RiCur	Ripple Current	0 or 1	0	300
81	BIT 6		134	8/07	MoTmp	Motor Temperatur	0 or 1	0	300
81	BIT 8		134	8/08	IL20	Current Limit after Preset Time	0 or 1	0	300
81	BIT A		134	8/09	Hall	Hall Sensor Error (Position)	0 or 1	0	300
81	BIT C		134	8/10	MoWrn	Motor Temperature Warning	0 or 1	0	300
81	BIT E		134	8/11	Feedb	Feedback Error	0 or 1	0	300
81	BIT F		134	8/12	ExtEr	External Error	0 or 1	0	300
83	BIT 0		135	8/13	OverC	Overcurrent Error	0 or 1	0	300
83	BIT 1		135	8/14	Speed	Speed > 0	0 or 1	0	300
83	BIT 2		135	8/15	Error	Common fault	0 or 1	0	300
83	BIT 3		135	8/16	Msg	Message available	0 or 1	0	300
83	BIT 6		135	8/17	Charg	BUSS Charging process	0 or 1	0	300
83	BIT 8		135	8/18	I-Lim	Current Limit	0 or 1	0	300
83	BIT 9		135	8/19	4Q	4Q, Generator operation	0 or 1	0	300
83	BIT C		135	8/20	BUSS	BUSS Error (OV, UV, Temp. Ripple)	0 or 1	0	300
83	BIT D		135	8/21	enabl	Powerstage Enabled (run with ref. speed)	0 or 1	0	300
83	BIT E		135	8/22	Ready	Ready (BUSS Charged, no Error, Running)	0 or 1	0	300
89	BIT 8		136	8/23	PLEr	Data in Memory out of Range	0 or 1	0	300
89	BIT B		136	8/24	ConEr	EEPROM not Connected	0 or 1	0	300
89	BIT D		136	8/25	R3Er	Cannot Read Data from EEPROM	0 or 1	0	300
89	BIT E		136	8/26	VerEr	Data not Equal to Data in EPROM	0 or 1	0	300
89	BIT F		136	8/27	P3Er	Cannot Write Data to EEPROM	0 or 1	0	300
83	BIT B		135	8/28	MoOvC	Motor Over Current	0 or 1	0	319
76	BIT 0		41	9/02	Read	Read EEPROM	0 or 1	0	300
68	WORD	2068	35	9/03	JOGS	Dig. Speed Rated Value	0 - 9999	0 min^{-1}	300
106	BIT 2		140	9/04	STD1	Output Status of terminal 48	0 or 1	0	300
106	BIT 3		140	9/05	STOK1	Output Status of terminal 43	0 or 1	0	300
106	BIT 4		140	9/06	STD2	Output Status of terminal 47	0 or 1	0	300
106	BIT 5		140	9/07	STOK2	Output Status of terminal 45	0 or 1	0	300
106	BIT 6		140	9/08	STOK3	Output Status of terminal 44	0 or 1	0	300
109	BIT 2		141	9/09	IST2	Input Status of terminal 2	0 or 1	0	300
109	BIT 3		141	9/10	IST3	Input Status of terminal 3	0 or 1	0	300
109	BIT 4		141	9/11	IST4	Input Status of terminal 4	0 or 1	0	300
109	BIT 5		141	9/12	IST5	Input Status of terminal 5	0 or 1	0	300
109	BIT 6		141	9/13	IST6	Input Status of terminal 6	0 or 1	0	300
109	BIT 7		141	9/14	IST7	Input Status of terminal 7	0 or 1	0	300
109	BIT 8		141	9/15	IST8	Input Status of terminal 8	0 or 1	0	300
109	BIT 9		141	9/16	IST9	Input Status of terminal 9	0 or 1	0	300
109	BIT A		141	9/17	IST10	Input Status of terminal 10	0 or 1	0	300
109	BIT B		141	9/18	IST11	Input Status of terminal 11	0 or 1	0	300
109	BIT C		141	9/19	IST12	Input Status of terminal 12	0 or 1	0	300
109	BIT D		141	9/20	IST13	Input Status of terminal 13	0 or 1	0	300
41	WORD	2041	11	9/21	CRaCu	Rated Current on Card	0 - 30000	0A	300
86	BIT 0		43	9/22	Hold	Quick Stop (Command)	0 or 1	0	300
86	BIT 1		43	9/23	Reset	Error Reset (Command)	0 or 1	0	300
86	BIT 4		43	9/24	Dir	Coun.clockw.direction (Command)	0 or 1	0	300
86	BIT 5		43	9/25	Jog	Enable digital rated value (Command)	0 or 1	0	300
86	BIT 6		43	9/26	Run	Start (Command)	0 or 1	0	300
86	BIT 8		43	9/27	SER	Set External Error (Command)	0 or 1	0	300
88	BIT 0		139	9/28	Hold	Quick Stop (Status)	0 or 1	0	300
88	BIT 1		139	9/29	Reset	Error Reset (Status)	0 or 1	0	300
88	BIT 4		139	9/30	Dir	Coun.clockw.direction (Status)	0 or 1	0	300
88	BIT 5		139	9/31	Jog	Digital rated value enabled (Status)	0 or 1	0	300
88	BIT 6		139	9/32	Run	Start (Status)	0 or 1	0	300
88	BIT 8		139	9/33	SER	Set External Error (Status)	0 or 1	0	300
87	BIT 0		44	9/34	Inc	Increase (Command)	0 or 1	0	300
87	BIT 1		44	9/35	Dec	Decrease (Command)	0 or 1	0	300

Sorting after TAE Parameter-No.

Code/ Attribut	Data size	CANopen Object Index	Parameter-No. DeviceNet	TAE	Display	Parameter name	Value Range	Initial Value	at Firmware Version
87	BIT 2		44	9/36	Sfber	Suppress feedback error (Command)	0 or 1	0	300
87	BIT 3		44	9/37	Set_B	Select Accel/Decel B (Command)	0 or 1	0	300
87	BIT 4		44	9/38	Pres1	Input Preset 1 (Command)	0 or 1	0	300
87	BIT 5		44	9/39	Pres2	Input Preset 2 (Command)	0 or 1	0	300
87	BIT 6		44	9/40	Slave	Slave operation (Command)	0 or 1	0	300
87	BIT 7		44	9/41	TQL	Torque Limit (Command)	0 or 1	0	300
87	BIT 8		44	9/42	Sync	Syncronise (Command)	0 or 1	0	300
87	BIT 9		44	9/43	Motpo	Motor potentiometer (Command)	0 or 1	0	300
87	BIT A		44	9/44	CWIh	cw Rotation Inhibited (Command)	0 or 1	0	300
87	BIT B		44	9/45	LDir	Reverse Leading Dir (Command)	0 or 1	0	300
87	BIT C		44	9/46	Up	Up (Motorpoti) (Command)	0 or 1	0	300
87	BIT D		44	9/47	Down	Down (Motorpoti) (Command)	0 or 1	0	300
87	BIT E		44	9/48	CCWIh	ccw Rotation Inhibited (Command)	0 or 1	0	300
87	BIT F		44	9/49	Ang	Angle Correction (Command)	0 or 1	0	300
80	BIT 0		137	9/50	Inc	Increase (Status)	0 or 1	0	300
80	BIT 1		137	9/51	Dec	Decrease (Status)	0 or 1	0	300
80	BIT 2		137	9/52	Sfber	Suppress feedback error (Status)	0 or 1	0	300
80	BIT 3		137	9/53	Set_B	Select Accel/Decel B (Status)	0 or 1	0	300
80	BIT 4		137	9/54	Pres1	Input Preset 1 (Status)	0 or 1	0	300
80	BIT 5		137	9/55	Pres2	Input Preset 2 (Status)	0 or 1	0	300
80	BIT 6		137	9/56	Slave	Slave operation (Status)	0 or 1	0	300
80	BIT 7		137	9/57	TQL	Torque Limit (Status)	0 or 1	0	300
80	BIT 8		137	9/58	Sync	Syncronise (Status)	0 or 1	0	300
80	BIT 9		137	9/59	Motpo	Motor potentiometer (Status)	0 or 1	0	300
80	BIT A		137	9/60	CWIh	cw Rotation Inhibited (Status)	0 or 1	0	300
80	BIT B		137	9/61	LDir	Reverse Leading Dir (Status)	0 or 1	0	300
80	BIT C		137	9/62	Up	Up (Motorpoti) (Status)	0 or 1	0	300
80	BIT D		137	9/63	Down	Down (Motorpoti) (Status)	0 or 1	0	300
80	BIT E		137	9/64	CCWIh	ccw Rotation Inhibited (Status)	0 or 1	0	300
80	BIT F		137	9/65	Ang	Angle Correction (Status)	0 or 1	0	300
217	BIT 0		113	9/66	DICON	Set Disable Controller (Command)	0 or 1	0	413
217	BIT 1		113	9/67	TLAP	Set T-Limit Analog/Prog (Command)	0 or 1	0	413
218	BIT 0		133	9/68	DICON	Set Disable Controller (Status)	0 or 1	0	413
218	BIT 1		133	9/69	TLAP	Set T-Limit Analog/Prog (Status)	0 or 1	0	413
218	BIT 2		133	9/70	POLSR	Leadspeed is reached (Status)	0 or 1	0	417
218	BIT 3		133	9/71	POSNO	Position is Not Ok (Over) (Status)	0 or 1	0	417
218	BIT 4		133	9/72	RPOSR	Reference position is reached (Status)	0 or 1	0	417
218	BIT 6		133	9/73	HLPOS	Hold position in Position controller (Status)	0 or 1	0	417
218	BIT A		133	9/74	POSOK	Position is Ok (Status)	0 or 1	0	417
218	BIT B		133	9/75	DMFRQ	Block mater frequence (Status)	0 or 1	0	417
218	BIT 5		133	9/76	INVCD	Invert Counter dir when Pos-Off (Status)	0 or 1	0	423
74	WORD	2074	39	9/77	ADR74	Control1	0 - 65535	0	300
75	WORD	2075	40	9/78	ADR75	Pos Control 1	0 - 65535	0	300
80	WORD	2080	137	9/79	ADR80	Pos Status 1	0 - 65535	0	300
81	WORD	2081	134	9/80	ADR81	Error 1	0 - 65535	0	300
83	WORD	2083	135	9/81	ADR83	Status 2	0 - 65535	0	300
88	WORD	2088	139	9/82	ADR88	Status 1	0 - 65535	0	300
89	WORD	2089	136	9/83	ADR89	Error 2	0 - 65535	0	300
106	WORD	2106	140	9/84	AD106	Dig. Output Status	0 - 65535	0	300
107	WORD	2107	121	9/85	AD107	Dig. Out Polarity	0 - 65535	0	300
108	WORD	2108	122	9/86	AD108	Dig. Input Polarity	0 - 65535	0	300
109	WORD	2109	141	9/87	AD109	Dig. Input Status	0 - 65535	0	300
218	WORD	2218	133	9/88	AD218	Control2 Status	0 - 65535	0	413
29	WORD	2029	143	9/89	TEST1	O_TEST 1	0 - 65535	0	300
30	WORD	2030	144	9/90	TEST2	O_TEST 2	0 - 65535	0	300
33	WORD	2033	145	9/91	TEST3	O_TEST 3	0 - 65535	0	300
34	WORD	2034	146	9/92	TEST4	O_TEST 4	0 - 65535	0	300
35	WORD	2035	148	9/93	R_HOUR	Operation time since Power UP	0 - 65535	0	300
13	WORD	2013	149	9/94	ADAPT1	N_Soll_Adapt 1	0 - 65535	0	417
14	WORD	2014	150	9/95	ADAPT2	N_Soll_Adapt 2	0 - 65535	0	417

We reserve the right to correct technical and printing errors.

4.2 Sorting after DeviceNet Parameter-No.

Code/ Attribut	Data size	CANopen Object Index	Parameter-No. DeviceNet	TAE	Display	Parameter name	Value Range	Initial Value	at Firmware Version
2	WORD	2002	1	1/04	PRST1	Preset Speed (or Ratio) 1	0 - 64000	0	300
3	WORD	2003	2	1/05	PRST2	Preset Speed (or Ratio) 2	0 - 64000	0	300
4	WORD	2004	3	1/06	PRST3	Preset Speed (or Ratio) 3	0 - 64000	0	300
6	WORD	2006	4	2/30	PHMAX	Maximum rated-Position x10000	0 - 65535	0	417
7	WORD	2007	5	2/31	PLMAX	Maximum rated-Position x1	0 - 65535	0	417
8	WORD	2008	6	2/32	PHIGH	Rated-Position x10000	0 - 65535	0	417
9	WORD	2009	7	2/33	PLOW	Rated-Position x1	0 - 65535	0	417
10	WORD	2010	8	2/10	ACC_B	Acceleration Time B 5999 ≙ 599.9s	1 - 5999	1800	300
11	WORD	2011	9	2/11	DEC_B	Deceleration Time B 5999 ≙ 599.9s	1 - 5999	1800	300
12	WORD	2012	10	2/17	FINE	Fine Adjustment, 1/4 RPM	0 - 3	0	300
41	WORD	2041	11	9/21	CRaCu	Rated Current on Card	0 - 30000	0A	300
42	WORD	2042	12	5/06	DEVTY	Device Type 3001≙ 300.1	1 - 20000	0	300
43	WORD	2043	13	5/07	SERNO	Series Number	100 - 65535	0	300
44	WORD	2044	14	5/02	ADJRC	Adjust Rated Current	1100 - 2000	1350	325
47	WORD	2047	15	1/18	YI0P	Limit Integral Part for Speed	1 - 255	255 min^{-1}	300
48	WORD	2048	16	1/10	RAMP	Select Ramp Mode (Jump, Lin., s)	0 - 2	1	315
50	WORD	2050	17	1/16	P_AMP	Proportional Amplifier for Speed	0 - 100	3%	300
51	WORD	2051	18	4/06	ADR	Device Address for Ser. Interface	1 - 127	1	300
52	WORD	2052	19	1/17	I_AMP	Integral Amplifier for Speed	0 - 100	2%	300
53	WORD	2053	20	4/02	CFMAX	Maximum Current Frequency	500 - 18000	6500Hz	300
54	WORD	2054	21	2/23	CLT1	Torque Limit Time Constant 30000 ≙ 300.00s	1 - 30000	1	321
55	WORD	2055	22	4/03	CFMIN	Starting Current Frequency	300 - 2500	1000Hz	300
56	WORD	2056	23	1/11	ACCEL	Acceleration Time 5999 ≙ 599,9s	1 - 5999	100	300
57	WORD	2057	24	4/04	CREND	Reaching Maximum Frequency here	100 - 800	300 min^{-1}	300
58	WORD	2058	25	1/12	DECEL	Deceleration Time 5999 ≙ 599,9s	1 - 5999	100	300
59	WORD	2059	26	2/18	SWTR	Switch at this Speed	10 - 9999	100 min^{-1}	300
60	WORD	2060	27	1/07	IL1Q	Current Limit 1st Quadrant (100 ≙ 10.0A)	1 - Imax [1)]	Imax [1)]	300
61	WORD	2061	28	2/19	IL20	Signalize Current Limit after this time (9999 ≙ 999.9s)	0 - 9999	1	300
62	WORD	2062	29	1/09	IL4Q	Current Limit 4th Quadrant (100 ≙ 10.0A)	1 - Imax [1)]	Imax [1)]	300
63	WORD	2063	30	2/24	UVTIM	Undervoltage Time 30000 ≙ 3000.0s	0 - 30000	1	325
64	WORD	2064	31	1/02	MAXS	Maximum Speed	100 - 6000	1000 min^{-1}	300
65	WORD	2065	32	5/05	LINE	Line Voltage	0 - 560	0V	311
66	WORD	2066	33	1/03	MINS	Minimum Speed	0 - 6000	0 min^{-1}	300
67	WORD	2067	34	2/08	OCTIM	Over current time (for n < 300 rpm)	0 - 200	80 s	300
68	WORD	2068	35	9/03	JOGS	Dig. Speed Rated Value	0 - 9999	0 min^{-1}	300
69	WORD	2069	36	2/25	OV_4Q	Overvoltage 4Q	100 - 1000	900V	325
70	WORD	2070	37	5/03	RCUR	Rated Current (30000 ≙ 3000.0A)	20 - 30000	1000	300
72	WORD	2072	38	2/05	PPR	Pulses per Revolution x4	1 - 9999	0	300
74	BIT 0		39	1/08	4Qen	4Q Operation Enabled	0 or 1	0	300
74	BIT 1		39	3/72	CAOP1	Change analog output polarity	0 or 1	0	406
74	BIT 2		39	2/21	DirAn	Select Revers by Negative rated value	0 or 1	0	300
74	BIT 3		39	3/54	TRQEN	Enable Torque regulation	0 or 1	0	402
74	BIT 4		39	1/14	BraDe	Wait With HOLD for 0.5s Using a Brake	0 or 1	0	300
74	BIT 5		39	1/13	LeaDe	Leaded Deceleration	0 or 1	1	300
74	BIT 6		39	1/15	DelOf	Turn Regulator off if Analog Input is 0	0 or 1	0	300
74	BIT 7		39	2/20	CodO	Fixed Function for Digital Outputs	0 or 1	0	300
74	BIT 8		39	3/73	POSEN	Enable position sensor	0 or 1	0	406
74	BIT A		39	2/22	4mA	Analoginput 1: 0-20mA / 4-20mA	0 or 1	0	300
74	BIT B		39	3/55	KLXEN	Motor Klixon active	0 or 1	0	402
74	BIT C		39	4/05	Servo	Servo Mode	0 or 1	0	300
74	BIT E		39	2/12	PhAdv	Phase Advance	0 or 1	0	300
74	WORD	2074	39	9/77	ADR74	Control1	0 - 65535	0	300
75	BIT 4		40	4/14	Limit	Limiter (No Accumulation while IL)	0 or 1	1	300
75	BIT D		40	4/15	AB_CD	Signal AB or Clock/Direction	0 or 1	0	300
75	WORD	2075	40	9/78	ADR75	Pos Control 1	0 - 65535	0	300
76	BIT 0		41	9/02	Read	Read EEPROM	0 or 1	0	300
76	BIT 1		41	1/19	Save	Save Parameter to EEPROM	0 or 1	0	300
76	BIT 2		41	2/02	Stdrd	Load Standard Parameter	0 or 1	0	300
76	WORD	2076	41	5/19	ADR76	Command_Exec	0 - 65535	0	300
78	WORD	2078	42	5/20	ADR78	Dat-Command	0 - 65535	0	300
86	BIT 0		43	9/22	Hold	Quick Stop (Command)	0 or 1	0	300
86	BIT 1		43	9/23	Reset	Error Reset (Command)	0 or 1	0	300

Sorting after DeviceNet Parameter-No.

Code/ Attribut	Data size	CANopen Object Index	Parameter-No. DeviceNet	TAE	Display	Parameter name	Value Range	Initial Value	at Firmware Version
86	BIT 4		43	9/24	Dir	Coun.clockw.direction (Command)	0 or 1	0	300
86	BIT 5		43	3/81	F_Jog	Dig. Speed Rated Value enable	0 - 1	0	417
86	BIT 5		43	9/25	Jog	Enable digital rated value (Command)	0 or 1	0	300
86	BIT 6		43	9/26	Run	Start (Command)	0 or 1	0	300
86	BIT 8		43	9/27	SER	Set External Error (Command)	0 or 1	0	300
86	WORD	2086	43	5/21	ADR86	Command1	0 - 65535	0	300
87	BIT 0		44	9/34	Inc	Increase (Command)	0 or 1	0	300
87	BIT 1		44	9/35	Dec	Decrease (Command)	0 or 1	0	300
87	BIT 2		44	9/36	Sfber	Suppress feedback error (Command)	0 or 1	0	300
87	BIT 3		44	9/37	Set_B	Select Accel/Decel B (Command)	0 or 1	0	300
87	BIT 4		44	9/38	Pres1	Input Preset 1 (Command)	0 or 1	0	300
87	BIT 5		44	9/39	Pres2	Input Preset 2 (Command)	0 or 1	0	300
87	BIT 6		44	9/40	Slave	Slave operation (Command)	0 or 1	0	300
87	BIT 7		44	9/41	TQL	Torque Limit (Command)	0 or 1	0	300
87	BIT 8		44	9/42	Sync	Syncronise (Command)	0 or 1	0	300
87	BIT 9		44	9/43	Motpo	Motor potentiometer (Command)	0 or 1	0	300
87	BIT A		44	9/44	CWIh	cw Rotation Inhibited (Command)	0 or 1	0	300
87	BIT B		44	9/45	LDir	Reverse Leading Dir (Command)	0 or 1	0	300
87	BIT C		44	9/46	Up	Up (Motorpoti) (Command)	0 or 1	0	300
87	BIT D		44	9/47	Down	Down (Motorpoti) (Command)	0 or 1	0	300
87	BIT E		44	9/48	CCWIh	ccw Rotation Inhibited (Command)	0 or 1	0	300
87	BIT F		44	9/49	Ang	Angle Correction (Command)	0 or 1	0	300
87	WORD	2087	44	5/22	ADR87	Pos-Command	0 - 65535	0	300
90	WORD	2090	45	4/07	PW_PA	Password for Changing of Parameters	0 - 999	0	300
91	WORD	2091	46	4/08	PW_CN	Password for Controlling from PG	0 - 999	111	300
92	WORD	2092	47	4/09	C_DSP	Select Continuous Display on PG	0 - 15	1	300
93	WORD	2093	48	4/10	B_DSP	Select Bargraph Display on PG	0 - 15	2	300
94	WORD	2094	49	4/11	DSP_F	Linespeed Factor/Motor Speed	1 - 9999	1000	300
100	WORD	2100	50	3/37	SD48	Output Selection Terminal 48	0 - 13	4	300
101	WORD	2101	51	3/41	SOK43	Output Selection Terminal 43	0 - 13	6	300
102	WORD	2102	52	3/38	SD47	Output Selection Terminal 47	0 - 13	1	300
103	WORD	2103	53	3/39	SOK45	Output Selection Terminal 45	0 - 13	7	300
105	WORD	2105	54	3/40	SOK44	Output Selection Terminal 44	0 - 13	2	300
120	WORD	2120	55	2/09	SETAB	Select Ramp A or B	0 - 15	0	300
121	WORD	2121	56	3/47	AOSEL	Source of Analog Output	0 - 15	1	300
122	WORD	2122	57	3/48	RSEL1	Src. of Ref. Value with Ramp	0 - 15	1	300
123	WORD	2123	58	3/49	RSEL2	Src. of Ref. Value without Ramp	0 - 15	0	300
124	WORD	2124	59	3/50	RSEL3	Rated value, Torque limit	0 - 15	0	300
125	WORD	2125	60	3/51	RSEL4	Source of Reference (Reserved)	0 - 15	0	300
126	WORD	2126	61	3/52	RSEL5	Source of Reference (Reserved)	0 - 15	0	300
127	WORD	2127	62	3/53	RSEL6	Source of Reference (Reserved)	0 - 15	0	300
130	WORD	2130	63	4/12	TRAN1	Transmission Factor n x Value	1 - 64000	1000	300
131	WORD	2131	64	4/13	TRAN2	Transmission Factor n / Value	1 - 64000	1000	300
132	WORD	2132	65	4/16	ANCOR	Angle Adjustment	0 - 65535	0	300
133	WORD	2133	66	4/17	PPR_M	Pulses per Revolution of Master x4	1 - 9999	120	300
134	WORD	2134	67	4/18	KPSLV	Amp. of Sync. Velocity Regulator	0 - 100	1%	300
135	WORD	2135	68	2/15	INCR	Speed + Increase Speed	0 - 9999	0	300
136	WORD	2136	69	2/16	DECR	Speed - Decrease Speed	0 - 9999	0	300
137	WORD	2137	70	4/20	SMOD	Select Slave Mode	0 - 2	1	300
138	WORD	2138	71	4/19	KPAM	Amplifier of Master Accelleration	0 - 100	0	300
140	BYTE 1	2140	72	5/08	AI1OF	Offset of Analog Input 1	0 - 255	0	300
141	BYTE 2	2141	73	5/09	AI1GA	Gain of Analog Input 1	0 - 255	0	300
142	BYTE 1	2142	74	5/10	AI2OF	Offset of Analog Input 2	0 - 255	0	300
143	BYTE 2	2143	75	5/11	AI2GA	Gain of Analog Input 2	0 - 255	0	300
144	BYTE 1	2144	76	5/12	AO_OF	Offset of Analog Output	0 - 255	0	300
145	BYTE 2	2145	77	5/13	AO_GA	Gain of Analog Output	0 - 255	0	300
146	BYTE 1	2146	78	5/14	ID_OF	Offset of Current Display	0 - 255	0	300
147	BYTE 2	2147	79	5/15	ID_GA	Gain of Current Display	0 - 255	0	300
160	WORD	2160	80	2/06	MRACU	Motor Rated Current 30000 ≙ 3000.0A	1 - 30000	0	300
161	WORD	2161	81	2/07	MPECU	Motor Peak Current (Limits IL1Q/IL4Q) 30000 ≙ 3000.0A	1 - 30000	0	300
162	WORD	2162	82	4/21	PULSE	Pulses to end position	1 - 64000	1	300
163	WORD	2163	83	4/22	CORR	Compensate Sensor Dead Time	0 - 9999	0	300

We reserve the right to correct technical and printing errors.

Sorting after DeviceNet Parameter-No.

Code/ Attribut	Data size	CANopen Object Index	Parameter-No. DeviceNet	TAE	Display	Parameter name	Value Range	Initial Value	at Firmware Version
164	WORD	2164	84	2/04	POLES	Poles of Motor	2 - 32	0	300
165	WORD	2165	85	2/13	PHADR	Phase Advance at Rated Speed	0 - 99	30%	300
166	WORD	2166	86	2/03	RATSP	Motor rated Speed (BL-N-motors lower Speed)	0 - 6000	0 min^{-1}	300
167	WORD	2167	87	2/14	PHADM	Phase Advance at Max Speed	0 - 99	50%	300
168	WORD	2168	88	5/04	COBRE	Commutation Break	10 - 50	10	300
170	WORD	2170	89	3/03	SRUN	Input Selection Run	0 - 13	3	300
171	WORD	2171	90	3/05	SDIR	Input Selection Direction (Master)	0 - 13	5	300
172	WORD	2172	91	3/06	SHOLD	Input Selection Hold	0 - 13	6	300
174	WORD	2174	92	3/04	SPRS1	Input Selection Preset 1	0 - 13	4	300
175	WORD	2175	93	3/07	SPRS2	Input Selection Preset 2	0 - 13	7	300
176	WORD	2176	94	3/09	SUP	Input Selection Motorpoti Up	0 - 13	9	300
177	WORD	2177	95	3/10	SDOWN	Input Selection Motorpoti Down	0 - 13	10	300
178	WORD	2178	96	3/08	SMOT	Input Selection Motorpoti	0 - 13	8	300
180	WORD	2180	97	3/11	SINC	Input Selection Increase	0 - 13	11	300
181	WORD	2181	98	3/12	SDEC	Input Selection Decrease	0 - 13	12	300
182	WORD	2182	99	3/13	SSLAV	Input Selection Slave	0 - 13	13	300
183	WORD	2183	100	3/02	SRES	Input Selection Reset	0 - 13	2	300
184	WORD	2184	101	3/14	SSPER	Input Selection Suppress speed error	0 - 13	0	300
185	WORD	2185	102	3/15	SSYNC	Input Selection Synchron, Angle or Speed	0 - 13	1	300
186	WORD	2186	103	3/17	SICW	Input Selection Inhibit cw	0 - 13	0	300
187	WORD	2187	104	3/18	SICCW	Input Selection Inhibit ccw	0 - 13	0	300
188	WORD	2188	105	3/19	SSETB	Input Selection Set Ramp B	0 - 13	0	300
189	WORD	2189	106	3/16	SANG	Input Selection Angle Correction	0 - 13	0	300
190	WORD	2190	107	3/20	SLDIR	Input Selection Slave Direction	0 - 13	0	300
191	WORD	2191	108	3/21	STQL	Input Selection Torque limit	0 - 13	0	333
192	WORD	2192	109	3/22	SSER	Input Selection Set External Error	0 - 13	0	333
193	WORD	2193	110	3/23	SSDC	Input Selection Set Disable Controller	0 - 13	0	300
194	WORD	2194	111	3/24	STLAP	Input Selection T-Limit Ana/Prog	0 - 13	0	300
216	WORD	2216	112	2/26	PTQL	Programable Torque limit 1000 ≙ 100.0%	0 - 1000	1000	412
217	BIT 0		113	9/66	DICON	Set Disable Controller (Command)	0 or 1	0	413
217	BIT 1		113	9/67	TLAP	Set T-Limit Analog/Prog (Command)	0 or 1	0	413
217	BIT 5		113	3/80	INVCD	Invert Counter dir when Pos-Off (Command)	0 - 1	0	423
217	BIT 7		113	3/79	ENPOS	Enable positioning (Command)	0 - 1	0	417
217	BIT 8		113	3/74	STPOS	Go to 1st position (Command)	0 - 1	0	417
217	BIT 9		113	3/75	BRCUR	Type of Break curve Ramp/Scurve (Command)	0 - 1	0	417
217	BIT C		113	3/76	REPOS	Reset Position (Command)	0 - 1	0	417
217	BIT D		113	3/77	REFPO	Define direction of position (Command)	0 - 1	0	417
217	BIT E		113	3/78	GSPOS	Go to Start position (Command)	0 - 1	0	417
217	WORD	2217	113	5/18	CONT2	Control2	0 - 65535	0	300
219	WORD	2219	114	2/27	MPTUL	Motorpoti transmission limit (UP)	0 - 100	0%	414
220	WORD	2220	115	2/28	MPTDL	Motorpoti transmission limit (DOWN)	0 - 100	0%	414
221	WORD	2221	116	2/34	MPOSP	Position maximum speed	0 - 6000	100 min^{-1}	417
222	WORD	2222	117	2/35	WINPO	position window (pulses/revolution x4)	1 - 255	30	417
223	WORD	2223	118	2/36	KPP_P	proportional Amplifier for Positioning	0 - 255	75	417
224	WORD	2224	119	2/29	DEC_C	Deceleration Time C 5999 ≙ 599.9s	1 - 5999	1800	417
225	WORD	2225	120	2/37	ADJBC	Adjust start of breaking curve 1000 ≙ 100.0s	1 - 1000	10	417
107	BIT 2		121	3/42	PD48	Output Polarity Te.48	0 or 1	1	300
107	BIT 3		121	3/46	POK43	Output Polarity Te.43	0 or 1	1	300
107	BIT 4		121	3/43	PD47	Output Polarity Te.47	0 or 1	1	300
107	BIT 5		121	3/44	POK45	Output Polarity Te.45	0 or 1	1	300
107	BIT 6		121	3/45	POK44	Output Polarity Te.44	0 or 1	0	300
107	WORD	2107	121	9/85	AD107	Dig. Out Polarity	0 - 65535	0	300
108	BIT 2		122	3/25	IPL2	Input Polarity TE. 2	0 or 1	1	300
108	BIT 3		122	3/26	IPL3	Input Polarity TE. 3	0 or 1	1	300
108	BIT 4		122	3/27	IPL4	Input Polarity TE. 4	0 or 1	1	300
108	BIT 5		122	3/28	IPL5	Input Polarity TE. 5	0 or 1	1	300
108	BIT 6		122	3/29	IPL6	Input Polarity TE. 6	0 or 1	1	300
108	BIT 7		122	3/30	IPL7	Input Polarity TE. 7	0 or 1	1	300
108	BIT 8		122	3/31	IPL8	Input Polarity TE. 8	0 or 1	1	300
108	BIT 9		122	3/32	IPL9	Input Polarity TE. 9	0 or 1	1	300
108	BIT A		122	3/33	IPL10	Input Polarity TE. 10	0 or 1	1	300
108	BIT B		122	3/34	IPL11	Input Polarity TE. 11	0 or 1	1	300

Sorting after DeviceNet Parameter-No.

Code/ Attribut	Data size	CANopen Object Index	Parameter-No. DeviceNet	TAE	Display	Parameter name	Value Range	Initial Value	at Firmware Version
108	BIT C		122	3/35	IPL12	Input Polarity TE. 12	0 or 1	1	300
108	BIT D		122	3/36	IPL13	Input Polarity TE. 13	0 or 1	1	300
108	WORD	2108	122	9/86	AD108	Dig. Input Polarity	0 - 65535	0	300
82	WORD	2082	123	0/01	Speed	Actual Speed	0 - 9999	0 min^{-1}	300
84	WORD	2084	124	0/02	Curr	Actual Current 30000 ≙ 3000.0A	0 - 30000	0	300
79	WORD	2079	125	0/03	LSpd	Actual Line Speed	0 - 30000	0	300
95	WORD	2095	126	0/04	LSpd1	Actual Line Speed 30000 ≙ 3000.0	0 - 30000	0	300
96	WORD	2096	127	0/05	LSpd2	Actual Line Speed 30000 ≙ 300.00	0 - 30000	0	300
24	WORD	2024	128	0/06	PosLo	Actual Position (low)	0 - 65535	0	300
25	WORD	2025	129	0/07	PosHi	Actual Position (high) x65536	0 - 65535	0	300
27	WORD	2027	130	0/08	Lead	Leading Speed	0 - 9999	0 min^{-1}	300
37	WORD	2037	131	0/09	SW	Software Version	0 - 64000	0	300
40	WORD	2040	132	0/10	BusV	BusVoltage	0 - 9999	0 V	300
218	BIT 0		133	9/68	DICON	Set Disable Controller (Status)	0 or 1	0	413
218	BIT 1		133	9/69	TLAP	Set T-Limit Analog/Prog (Status)	0 or 1	0	413
218	BIT 2		133	9/70	POLSR	Leadspeed is reached (Status)	0 or 1	0	417
218	BIT 3		133	9/71	POSNO	Position is Not Ok (Over) (Status)	0 or 1	0	417
218	BIT 4		133	9/72	RPOSR	Reference position is reached (Status)	0 or 1	0	417
218	BIT 5		133	9/76	INVCD	Invert Counter dir when Pos-Off (Status)	0 or 1	0	423
218	BIT 6		133	9/73	HLPOS	Hold position in Position controller (Status)	0 or 1	0	417
218	BIT A		133	9/74	POSOK	Position is Ok (Status)	0 or 1	0	417
218	BIT B		133	9/75	DMFRQ	Block mater frequence (Status)	0 or 1	0	417
218	WORD	2218	133	9/88	AD218	Control2 Status	0 - 65535	0	413
81	BIT 1		134	8/02	Klix	Klixon, Overtemp. in Power Stage	0 or 1	0	300
81	BIT 2		134	8/03	OverV	Overvoltage	0 or 1	0	300
81	BIT 3		134	8/04	IGBTE	Error in Power Stage Transistor	0 or 1	0	300
81	BIT 4		134	8/05	UV	Undervoltage	0 or 1	0	300
81	BIT 5		134	8/06	RiCur	Ripple Current	0 or 1	0	300
81	BIT 6		134	8/07	MoTmp	Motor Temperatur	0 or 1	0	300
81	BIT 8		134	8/08	IL20	Current Limit after Preset Time	0 or 1	0	300
81	BIT A		134	8/09	Hall	Hall Sensor Error (Position)	0 or 1	0	300
81	BIT C		134	8/10	MoWrn	Motor Temperature Warning	0 or 1	0	300
81	BIT E		134	8/11	Feedb	Feedback Error	0 or 1	0	300
81	BIT F		134	8/12	ExtEr	External Error	0 or 1	0	300
81	WORD	2081	134	9/80	ADR81	Error 1	0 - 65535	0	300
83	BIT 0		135	8/13	OverC	Overcurrent Error	0 or 1	0	300
83	BIT 1		135	8/14	Speed	Speed > 0	0 or 1	0	300
83	BIT 2		135	8/15	Error	Common fault	0 or 1	0	300
83	BIT 3		135	8/16	Msg	Message available	0 or 1	0	300
83	BIT 6		135	8/17	Charg	BUSS Charging process	0 or 1	0	300
83	BIT 8		135	8/18	I-Lim	Current Limit	0 or 1	0	300
83	BIT 9		135	8/19	4Q	4Q, Generator operation	0 or 1	0	300
83	BIT B		135	8/28	MoOvC	Motor Over Current	0 or 1	0	319
83	BIT C		135	8/20	BUSS	BUSS Error (OV, UV, Temp. Ripple)	0 or 1	0	300
83	BIT D		135	8/21	enabl	Powerstage Enabled (run with ref. speed)	0 or 1	0	300
83	BIT E		135	8/22	Ready	Ready (BUSS Charged, no Error, Running)	0 or 1	0	300
83	WORD	2083	135	9/81	ADR83	Status 2	0 - 65535	0	300
89	BIT 8		136	8/23	PLEr	Data in Memory out of Range	0 or 1	0	300
89	BIT B		136	8/24	ConEr	EEPROM not Connected	0 or 1	0	300
89	BIT D		136	8/25	R3Er	Cannot Read Data from EEPROM	0 or 1	0	300
89	BIT E		136	8/26	VerEr	Data not Equal to Data in EPROM	0 or 1	0	300
89	BIT F		136	8/27	P3Er	Cannot Write Data to EEPROM	0 or 1	0	300
89	WORD	2089	136	9/83	ADR89	Error 2	0 - 65535	0	300
80	BIT 0		137	9/50	Inc	Increase (Status)	0 or 1	0	300
80	BIT 1		137	9/51	Dec	Decrease (Status)	0 or 1	0	300
80	BIT 2		137	9/52	Sfber	Suppress feedback error (Status)	0 or 1	0	300
80	BIT 3		137	9/53	Set_B	Select Accel/Decel B (Status)	0 or 1	0	300
80	BIT 4		137	9/54	Pres1	Input Preset 1 (Status)	0 or 1	0	300
80	BIT 5		137	9/55	Pres2	Input Preset 2 (Status)	0 or 1	0	300
80	BIT 6		137	9/56	Slave	Slave operation (Status)	0 or 1	0	300
80	BIT 7		137	9/57	TQL	Torque Limit (Status)	0 or 1	0	300
80	BIT 8		137	9/58	Sync	Syncronise (Status)	0 or 1	0	300

We reserve the right to correct technical and printing errors.

Sorting after DeviceNet Parameter-No.

Code/ Attribut	Data size	CANopen Object Index	Parameter-No. DeviceNet	TAE	Display	Parameter name	Value Range	Initial Value	at Firmware Version
80	BIT 9		137	9/59	Motpo	Motor potentiometer (Status)	0 or 1	0	300
80	BIT A		137	9/60	CWIh	cw Rotation Inhibited (Status)	0 or 1	0	300
80	BIT B		137	9/61	LDir	Reverse Leading Dir (Status)	0 or 1	0	300
80	BIT C		137	9/62	Up	Up (Motorpoti) (Status)	0 or 1	0	300
80	BIT D		137	9/63	Down	Down (Motorpoti) (Status)	0 or 1	0	300
80	BIT E		137	9/64	CCWIh	ccw Rotation Inhibited (Status)	0 or 1	0	300
80	BIT F		137	9/65	Ang	Angle Correction (Status)	0 or 1	0	300
80	WORD	2080	137	9/79	ADR80	Pos Status 1	0 - 65535	0	300
88	BIT 0		139	9/28	Hold	Quick Stop (Status)	0 or 1	0	300
88	BIT 1		139	9/29	Reset	Error Reset (Status)	0 or 1	0	300
88	BIT 4		139	9/30	Dir	Coun.clockw.direction (Status)	0 or 1	0	300
88	BIT 5		139	9/31	Jog	Digital rated value enabled (Status)	0 or 1	0	300
88	BIT 6		139	9/32	Run	Start (Status)	0 or 1	0	300
88	BIT 8		139	9/33	SER	Set External Error (Status)	0 or 1	0	300
88	WORD	2088	139	9/82	ADR88	Status 1	0 - 65535	0	300
106	BIT 2		140	9/04	STD1	Output Status of terminal 48	0 or 1	0	300
106	BIT 3		140	9/05	STOK1	Output Status of terminal 43	0 or 1	0	300
106	BIT 4		140	9/06	STD2	Output Status of terminal 47	0 or 1	0	300
106	BIT 5		140	9/07	STOK2	Output Status of terminal 45	0 or 1	0	300
106	BIT 6		140	9/08	STOK3	Output Status of terminal 44	0 or 1	0	300
106	WORD	2106	140	9/84	AD106	Dig. Output Status	0 - 65535	0	300
109	BIT 2		141	9/09	IST2	Input Status of terminal 2	0 or 1	0	300
109	BIT 3		141	9/10	IST3	Input Status of terminal 3	0 or 1	0	300
109	BIT 4		141	9/11	IST4	Input Status of terminal 4	0 or 1	0	300
109	BIT 5		141	9/12	IST5	Input Status of terminal 5	0 or 1	0	300
109	BIT 6		141	9/13	IST6	Input Status of terminal 6	0 or 1	0	300
109	BIT 7		141	9/14	IST7	Input Status of terminal 7	0 or 1	0	300
109	BIT 8		141	9/15	IST8	Input Status of terminal 8	0 or 1	0	300
109	BIT 9		141	9/16	IST9	Input Status of terminal 9	0 or 1	0	300
109	BIT A		141	9/17	IST10	Input Status of terminal 10	0 or 1	0	300
109	BIT B		141	9/18	IST11	Input Status of terminal 11	0 or 1	0	300
109	BIT C		141	9/19	IST12	Input Status of terminal 12	0 or 1	0	300
109	BIT D		141	9/20	IST13	Input Status of terminal 13	0 or 1	0	300
109	WORD	2109	141	9/87	AD109	Dig. Input Status	0 - 65535	0	300
36	WORD	2036	142	5/17	W_Hour	Workin Hours	0 - 65535	0h	300
29	WORD	2029	143	9/89	TEST1	O_TEST 1	0 - 65535	0	300
30	WORD	2030	144	9/90	TEST2	O_TEST 2	0 - 65535	0	300
33	WORD	2033	145	9/91	TEST3	O_TEST 3	0 - 65535	0	300
34	WORD	2034	146	9/92	TEST4	O_TEST 4	0 - 65535	0	300
32	WORD	2032	147	0/11	ARVSP	Actual speed rated value	0 - 9999	0 min^{-1}	300
35	WORD	2035	148	9/93	R_HOUR	Operation time since Power UP	0 - 65535	0	300
13	WORD	2013	149	9/94	ADAPT1	N_Soll_Adapt 1	0 - 65535	0	417
14	WORD	2014	150	9/95	ADAPT2	N_Soll_Adapt 2	0 - 65535	0	417
200	BYTE 1	2200	-	3/56	PP0R	Profibus Parameter 0 read	0 - 255	0	402
202	BYTE 1	2202	-	3/58	PP1R	Profibus Parameter 1 read	0 - 255	0	402
204	BYTE 1	2204	-	3/60	PP2R	Profibus Parameter 2 read	0 - 255	0	402
206	BYTE 1	2206	-	3/62	PP3R	Profibus Parameter 3 read	0 - 255	0	402
208	BYTE 1	2208	-	3/64	PP4R	Profibus Parameter 4 read	0 - 255	0	402
210	BYTE 1	2210	-	3/66	PP5R	Profibus Parameter 5 read	0 - 255	0	402
212	BYTE 1	2212	-	3/68	PP6R	Profibus Parameter 6 read	0 - 255	0	402
214	BYTE 1	2214	-	3/70	PP7R	Profibus Parameter 7 read	0 - 255	0	402
201	BYTE 2	2201	-	3/57	PP0W	Profibus Parameter 0 write	0 - 255	0	402
203	BYTE 2	2203	-	3/59	PP1W	Profibus Parameter 1 write	0 - 255	0	402
205	BYTE 2	2205	-	3/61	PP2W	Profibus Parameter 2 write	0 - 255	0	402
207	BYTE 2	2207	-	3/63	PP3W	Profibus Parameter 3 write	0 - 255	0	402
209	BYTE 2	2209	-	3/65	PP4W	Profibus Parameter 4 write	0 - 255	0	402
211	BYTE 2	2211	-	3/67	PP5W	Profibus Parameter 5 write	0 - 255	0	402
213	BYTE 2	2213	-	3/69	PP6W	Profibus Parameter 6 write	0 - 255	0	402
215	BYTE 2	2215	-	3/71	PP7W	Profibus Parameter 7 write	0 - 255	0	402
226	WORD	2226	-	5/16	AJTRC	Adjust Torque regulation curve	0 - 1000	10	422

4.2 Sorting after Code/Attribut respectively CANopen Object Index

Code/ Attribut	Data size	CANopen Object Index	Parameter-No. DeviceNet	TAE	Display	Parameter name	Value Range	Initial Value	at Firmware Version
2	WORD	2002	1	1/04	PRST1	Preset Speed (or Ratio) 1	0 - 64000	0	300
3	WORD	2003	2	1/05	PRST2	Preset Speed (or Ratio) 2	0 - 64000	0	300
4	WORD	2004	3	1/06	PRST3	Preset Speed (or Ratio) 3	0 - 64000	0	300
6	WORD	2006	4	2/30	PHMAX	Maximum rated-Position x10000	0 - 65535	0	417
7	WORD	2007	5	2/31	PLMAX	Maximum rated-Position x1	0 - 65535	0	417
8	WORD	2008	6	2/32	PHIGH	Rated-Position x10000	0 - 65535	0	417
9	WORD	2009	7	2/33	PLOW	Rated-Position x1	0 - 65535	0	417
10	WORD	2010	8	2/10	ACC_B	Acceleration Time B 5999 ≙ 599.9s	1 - 5999	1800	300
11	WORD	2011	9	2/11	DEC_B	Deceleration Time B 5999 ≙ 599.9s	1 - 5999	1800	300
12	WORD	2012	10	2/17	FINE	Fine Adjustment, 1/4 RPM	0 - 3	0	300
13	WORD	2013	149	9/94	ADAPT1	N_Soll_Adapt 1	0 - 65535	0	417
14	WORD	2014	150	9/95	ADAPT2	N_Soll_Adapt 2	0 - 65535	0	417
24	WORD	2024	128	0/06	PosLo	Actual Position (low)	0 - 65535	0	300
25	WORD	2025	129	0/07	PosHi	Actual Position (high) x65536	0 - 65535	0	300
27	WORD	2027	130	0/08	Lead	Leading Speed	0 - 9999	0 min^{-1}	300
29	WORD	2029	143	9/89	TEST1	O_TEST 1	0 - 65535	0	300
30	WORD	2030	144	9/90	TEST2	O_TEST 2	0 - 65535	0	300
32	WORD	2032	147	0/11	ARVSP	Actual speed rated value	0 - 9999	0 min^{-1}	300
33	WORD	2033	145	9/91	TEST3	O_TEST 3	0 - 65535	0	300
34	WORD	2034	146	9/92	TEST4	O_TEST 4	0 - 65535	0	300
35	WORD	2035	148	9/93	R_HOUR	Operation time since Power UP	0 - 65535	0	300
36	WORD	2036	142	5/17	W_Hour	Workin Hours	0 - 65535	0h	300
37	WORD	2037	131	0/09	SW	Software Version	0 - 64000	0	300
40	WORD	2040	132	0/10	BusV	BusVoltage	0 - 9999	0 V	300
41	WORD	2041	11	9/21	CRaCu	Rated Current on Card	0 - 30000	0A	300
42	WORD	2042	12	5/06	DEVTY	Device Type 3001≙ 300.1	1 - 20000	0	300
43	WORD	2043	13	5/07	SERNO	Series Number	100 - 65535	0	300
44	WORD	2044	14	5/02	ADJRC	Adjust Rated Current	1100 - 2000	1350	325
47	WORD	2047	15	1/18	YI0P	Limit Integral Part for Speed	1 - 255	255 min^{-1}	300
48	WORD	2048	16	1/10	RAMP	Select Ramp Mode (Jump, Lin., s)	0 - 2	1	315
50	WORD	2050	17	1/16	P_AMP	Proportional Amplifier for Speed	0 - 100	3%	300
51	WORD	2051	18	4/06	ADR	Device Address for Ser. Interface	1 - 127	1	300
52	WORD	2052	19	1/17	I_AMP	Integral Amplifier for Speed	0 - 100	2%	300
53	WORD	2053	20	4/02	CFMAX	Maximum Current Frequency	500 - 18000	6500Hz	300
54	WORD	2054	21	2/23	CLT1	Torque Limit Time Constant 30000 ≙ 300.00s	1 - 30000	1	321
55	WORD	2055	22	4/03	CFMIN	Starting Current Frequency	300 - 2500	1000Hz	300
56	WORD	2056	23	1/11	ACCEL	Acceleration Time 5999 ≙ 599,9s	1 - 5999	100	300
57	WORD	2057	24	4/04	CREND	Reaching Maximum Frequency here	100 - 800	300 min^{-1}	300
58	WORD	2058	25	1/12	DECEL	Deceleration Time 5999 ≙ 599,9s	1 - 5999	100	300
59	WORD	2059	26	2/18	SWTR	Switch at this Speed	10 - 9999	100 min^{-1}	300
60	WORD	2060	27	1/07	IL1Q	Current Limit 1st Quadrant (100 ≙ 10.0A)	1 - Imax [1)]	Imax [1)]	300
61	WORD	2061	28	2/19	IL20	Signalize Current Limit after this time (9999 ≙ 999.9s)	0 - 9999	1	300
62	WORD	2062	29	1/09	IL4Q	Current Limit 4th Quadrant (100 ≙ 10.0A)	1 - Imax [1)]	Imax [1)]	300
63	WORD	2063	30	2/24	UVTIM	Undervoltage Time 30000 ≙ 3000.0s	0 - 30000	1	325
64	WORD	2064	31	1/02	MAXS	Maximum Speed	100 - 6000	1000 min^{-1}	300
65	WORD	2065	32	5/05	LINE	Line Voltage	0 - 560	0V	311
66	WORD	2066	33	1/03	MINS	Minimum Speed	0 - 6000	0 min^{-1}	300
67	WORD	2067	34	2/08	OCTIM	Over current time (for n < 300 rpm)	0 - 200	80 s	300
68	WORD	2068	35	9/03	JOGS	Dig. Speed Rated Value	0 - 9999	0 min^{-1}	300
69	WORD	2069	36	2/25	OV_4Q	Overvoltage 4Q	100 - 1000	900V	325
70	WORD	2070	37	5/03	RCUR	Rated Current (30000 ≙ 3000.0A)	20 - 30000	1000	300
72	WORD	2072	38	2/05	PPR	Pulses per Revolution x4	1 - 9999	0	300
74	BIT 0		39	1/08	4Qen	4Q Operation Enabled	0 or 1	0	300
74	BIT 1		39	3/72	CAOP1	Change analog output polarity	0 or 1	0	406
74	BIT 2		39	2/21	DirAn	Select Revers by Negative rated value	0 or 1	0	300
74	BIT 3		39	3/54	TRQEN	Enable Torque regulation	0 or 1	0	402
74	BIT 4		39	1/14	BraDe	Wait With HOLD for 0.5s Using a Brake	0 or 1	0	300
74	BIT 5		39	1/13	LeaDe	Leaded Deceleration	0 or 1	1	300
74	BIT 6		39	1/15	DelOf	Turn Regulator off if Analog Input is 0	0 or 1	0	300
74	BIT 7		39	2/20	CodO	Fixed Function for Digital Outputs	0 or 1	0	300
74	BIT 8		39	3/73	POSEN	Enable position sensor	0 or 1	0	406
74	BIT A		39	2/22	4mA	Analoginput 1: 0-20mA / 4-20mA	0 or 1	0	300

Sorting after Code/Attribut respectively CANopen Object Index

Code/ Attribut	Data size	CANopen Object Index	Parameter-No. DeviceNet	TAE	Display	Parameter name	Value Range	Initial Value	at Firmware Version
74	BIT B		39	3/55	KLXEN	Motor Klixon active	0 or 1	0	402
74	BIT C		39	4/05	Servo	Servo Mode	0 or 1	0	300
74	BIT E		39	2/12	PhAdv	Phase Advance	0 or 1	0	300
74	WORD	2074	39	9/77	ADR74	Control1	0 - 65535	0	300
75	BIT 4		40	4/14	Limit	Limiter (No Accumulation while IL)	0 or 1	1	300
75	BIT D		40	4/15	AB_CD	Signal AB or Clock/Direction	0 or 1	0	300
75	WORD	2075	40	9/78	ADR75	Pos Control 1	0 - 65535	0	300
76	BIT 0		41	9/02	Read	Read EEPROM	0 or 1	0	300
76	BIT 1		41	1/19	Save	Save Parameter to EEPROM	0 or 1	0	300
76	BIT 2		41	2/02	Stdrd	Load Standard Parameter	0 or 1	0	300
76	WORD	2076	41	5/19	ADR76	Command_Exec	0 - 65535	0	300
78	WORD	2078	42	5/20	ADR78	Dat-Command	0 - 65535	0	300
79	WORD	2079	125	0/03	LSpd	Actual Line Speed	0 - 30000	0	300
80	BIT 0		137	9/50	Inc	Increase (Status)	0 or 1	0	300
80	BIT 1		137	9/51	Dec	Decrease (Status)	0 or 1	0	300
80	BIT 2		137	9/52	Sfber	Suppress feedback error (Status)	0 or 1	0	300
80	BIT 3		137	9/53	Set_B	Select Accel/Decel B (Status)	0 or 1	0	300
80	BIT 4		137	9/54	Pres1	Input Preset 1 (Status)	0 or 1	0	300
80	BIT 5		137	9/55	Pres2	Input Preset 2 (Status)	0 or 1	0	300
80	BIT 6		137	9/56	Slave	Slave operation (Status)	0 or 1	0	300
80	BIT 7		137	9/57	TQL	Torque Limit (Status)	0 or 1	0	300
80	BIT 8		137	9/58	Sync	Syncronise (Status)	0 or 1	0	300
80	BIT 9		137	9/59	Motpo	Motor potentiometer (Status)	0 or 1	0	300
80	BIT A		137	9/60	CWIh	cw Rotation Inhibited (Status)	0 or 1	0	300
80	BIT B		137	9/61	LDir	Reverse Leading Dir (Status)	0 or 1	0	300
80	BIT C		137	9/62	Up	Up (Motorpoti) (Status)	0 or 1	0	300
80	BIT D		137	9/63	Down	Down (Motorpoti) (Status)	0 or 1	0	300
80	BIT E		137	9/64	CCWIh	ccw Rotation Inhibited (Status)	0 or 1	0	300
80	BIT F		137	9/65	Ang	Angle Correction (Status)	0 or 1	0	300
80	WORD	2080	137	9/79	ADR80	Pos Status 1	0 - 65535	0	300
81	BIT 1		134	8/02	Klix	Klixon, Overtemp. in Power Stage	0 or 1	0	300
81	BIT 2		134	8/03	OverV	Overvoltage	0 or 1	0	300
81	BIT 3		134	8/04	IGBTE	Error in Power Stage Transistor	0 or 1	0	300
81	BIT 4		134	8/05	UV	Undervoltage	0 or 1	0	300
81	BIT 5		134	8/06	RiCur	Ripple Current	0 or 1	0	300
81	BIT 6		134	8/07	MoTmp	Motor Temperatur	0 or 1	0	300
81	BIT 8		134	8/08	IL20	Current Limit after Preset Time	0 or 1	0	300
81	BIT A		134	8/09	Hall	Hall Sensor Error (Position)	0 or 1	0	300
81	BIT C		134	8/10	MoWrn	Motor Temperature Warning	0 or 1	0	300
81	BIT E		134	8/11	Feedb	Feedback Error	0 or 1	0	300
81	BIT F		134	8/12	ExtEr	External Error	0 or 1	0	300
81	WORD	2081	134	9/80	ADR81	Error 1	0 - 65535	0	300
82	WORD	2082	123	0/01	Speed	Actual Speed	0 - 9999	0 min^{-1}	300
83	BIT 0		135	8/13	OverC	Overcurrent Error	0 or 1	0	300
83	BIT 1		135	8/14	Speed	Speed > 0	0 or 1	0	300
83	BIT 2		135	8/15	Error	Common fault	0 or 1	0	300
83	BIT 3		135	8/16	Msg	Message available	0 or 1	0	300
83	BIT 6		135	8/17	Charg	BUSS Charging process	0 or 1	0	300
83	BIT 8		135	8/18	I-Lim	Current Limit	0 or 1	0	300
83	BIT 9		135	8/19	4Q	4Q, Generator operation	0 or 1	0	300
83	BIT B		135	8/28	MoOvC	Motor Over Current	0 or 1	0	319
83	BIT C		135	8/20	BUSS	BUSS Error (OV, UV, Temp. Ripple)	0 or 1	0	300
83	BIT D		135	8/21	enabl	Powerstage Enabled (run with ref. speed)	0 or 1	0	300
83	BIT E		135	8/22	Ready	Ready (BUSS Charged, no Error, Running)	0 or 1	0	300
83	WORD	2083	135	9/81	ADR83	Status 2	0 - 65535	0	300
84	WORD	2084	124	0/02	Curr	Actual Current 30000 ≙ 3000.0A	0 - 30000	0	300
86	BIT 0		43	9/22	Hold	Quick Stop (Command)	0 or 1	0	300
86	BIT 1		43	9/23	Reset	Error Reset (Command)	0 or 1	0	300
86	BIT 4		43	9/24	Dir	Coun.clockw.direction (Command)	0 or 1	0	300
86	BIT 5		43	3/81	F_Jog	Dig. Speed Rated Value enable	0 - 1	0	417
86	BIT 5		43	9/25	Jog	Enable digital rated value (Command)	0 or 1	0	300
86	BIT 6		43	9/26	Run	Start (Command)	0 or 1	0	300

Sorting after Code/Attribut respectively CANopen Object Index

Code/ Attribut	Data size	CANopen Object Index	Parameter-No. DeviceNet	TAE	Display	Parameter name	Value Range	Initial Value	at Firmware Version
86	BIT 8		43	9/27	SER	Set External Error (Command)	0 or 1	0	300
86	WORD	2086	43	5/21	ADR86	Command1	0 - 65535	0	300
87	BIT 0		44	9/34	Inc	Increase (Command)	0 or 1	0	300
87	BIT 1		44	9/35	Dec	Decrease (Command)	0 or 1	0	300
87	BIT 2		44	9/36	Sfber	Suppress feedback error (Command)	0 or 1	0	300
87	BIT 3		44	9/37	Set_B	Select Accel/Decel B (Command)	0 or 1	0	300
87	BIT 4		44	9/38	Pres1	Input Preset 1 (Command)	0 or 1	0	300
87	BIT 5		44	9/39	Pres2	Input Preset 2 (Command)	0 or 1	0	300
87	BIT 6		44	9/40	Slave	Slave operation (Command)	0 or 1	0	300
87	BIT 7		44	9/41	TQL	Torque Limit (Command)	0 or 1	0	300
87	BIT 8		44	9/42	Sync	Syncronise (Command)	0 or 1	0	300
87	BIT 9		44	9/43	Motpo	Motor potentiometer (Command)	0 or 1	0	300
87	BIT A		44	9/44	CWIh	cw Rotation Inhibited (Command)	0 or 1	0	300
87	BIT B		44	9/45	LDir	Reverse Leading Dir (Command)	0 or 1	0	300
87	BIT C		44	9/46	Up	Up (Motorpoti) (Command)	0 or 1	0	300
87	BIT D		44	9/47	Down	Down (Motorpoti) (Command)	0 or 1	0	300
87	BIT E		44	9/48	CCWIh	ccw Rotation Inhibited (Command)	0 or 1	0	300
87	BIT F		44	9/49	Ang	Angle Correction (Command)	0 or 1	0	300
87	WORD	2087	44	5/22	ADR87	Pos-Command	0 - 65535	0	300
88	BIT 0		139	9/28	Hold	Quick Stop (Status)	0 or 1	0	300
88	BIT 1		139	9/29	Reset	Error Reset (Status)	0 or 1	0	300
88	BIT 4		139	9/30	Dir	Coun.clockw.direction (Status)	0 or 1	0	300
88	BIT 5		139	9/31	Jog	Digital rated value enabled (Status)	0 or 1	0	300
88	BIT 6		139	9/32	Run	Start (Status)	0 or 1	0	300
88	BIT 8		139	9/33	SER	Set External Error (Status)	0 or 1	0	300
88	WORD	2088	139	9/82	ADR88	Status 1	0 - 65535	0	300
89	BIT 8		136	8/23	PLEr	Data in Memory out of Range	0 or 1	0	300
89	BIT B		136	8/24	ConEr	EEPROM not Connected	0 or 1	0	300
89	BIT D		136	8/25	R3Er	Cannot Read Data from EEPROM	0 or 1	0	300
89	BIT E		136	8/26	VerEr	Data not Equal to Data in EPROM	0 or 1	0	300
89	BIT F		136	8/27	P3Er	Cannot Write Data to EEPROM	0 or 1	0	300
89	WORD	2089	136	9/83	ADR89	Error 2	0 - 65535	0	300
90	WORD	2090	45	4/07	PW_PA	Password for Changing of Parameters	0 - 999	0	300
91	WORD	2091	46	4/08	PW_CN	Password for Controlling from PG	0 - 999	111	300
92	WORD	2092	47	4/09	C_DSP	Select Continuous Display on PG	0 - 15	1	300
93	WORD	2093	48	4/10	B_DSP	Select Bargraph Display on PG	0 - 15	2	300
94	WORD	2094	49	4/11	DSP_F	Linespeed Factor/Motor Speed	1 - 9999	1000	300
95	WORD	2095	126	0/04	LSpd1	Actual Line Speed 30000 ≙ 3000.0	0 - 30000	0	300
96	WORD	2096	127	0/05	LSpd2	Actual Line Speed 30000 ≙ 300.00	0 - 30000	0	300
100	WORD	2100	50	3/37	SD48	Output Selection Terminal 48	0 - 13	4	300
101	WORD	2101	51	3/41	SOK43	Output Selection Terminal 43	0 - 13	6	300
102	WORD	2102	52	3/38	SD47	Output Selection Terminal 47	0 - 13	1	300
103	WORD	2103	53	3/39	SOK45	Output Selection Terminal 45	0 - 13	7	300
105	WORD	2105	54	3/40	SOK44	Output Selection Terminal 44	0 - 13	2	300
106	BIT 2		140	9/04	STD1	Output Status of terminal 48	0 or 1	0	300
106	BIT 3		140	9/05	STOK1	Output Status of terminal 43	0 or 1	0	300
106	BIT 4		140	9/06	STD2	Output Status of terminal 47	0 or 1	0	300
106	BIT 5		140	9/07	STOK2	Output Status of terminal 45	0 or 1	0	300
106	BIT 6		140	9/08	STOK3	Output Status of terminal 44	0 or 1	0	300
106	WORD	2106	140	9/84	AD106	Dig. Output Status	0 - 65535	0	300
107	BIT 2		121	3/42	PD48	Output Polarity Te.48	0 or 1	1	300
107	BIT 3		121	3/46	POK43	Output Polarity Te.43	0 or 1	1	300
107	BIT 4		121	3/43	PD47	Output Polarity Te.47	0 or 1	1	300
107	BIT 5		121	3/44	POK45	Output Polarity Te.45	0 or 1	1	300
107	BIT 6		121	3/45	POK44	Output Polarity Te.44	0 or 1	0	300
107	WORD	2107	121	9/85	AD107	Dig. Out Polarity	0 - 65535	0	300
108	BIT 2		122	3/25	IPL2	Input Polarity TE. 2	0 or 1	1	300
108	BIT 3		122	3/26	IPL3	Input Polarity TE. 3	0 or 1	1	300
108	BIT 4		122	3/27	IPL4	Input Polarity TE. 4	0 or 1	1	300
108	BIT 5		122	3/28	IPL5	Input Polarity TE. 5	0 or 1	1	300
108	BIT 6		122	3/29	IPL6	Input Polarity TE. 6	0 or 1	1	300
108	BIT 7		122	3/30	IPL7	Input Polarity TE. 7	0 or 1	1	300

We reserve the right to correct technical and printing errors.

Sorting after Code/Attribut respectively CANopen Object Index

Code/ Attribut	Data size	CANopen Object Index	Parameter-No. DeviceNet	TAE	Display	Parameter name	Value Range	Initial Value	at Firmware Version
108	BIT 8		122	3/31	IPL8	Input Polarity TE. 8	0 or 1	1	300
108	BIT 9		122	3/32	IPL9	Input Polarity TE. 9	0 or 1	1	300
108	BIT A		122	3/33	IPL10	Input Polarity TE. 10	0 or 1	1	300
108	BIT B		122	3/34	IPL11	Input Polarity TE. 11	0 or 1	1	300
108	BIT C		122	3/35	IPL12	Input Polarity TE. 12	0 or 1	1	300
108	BIT D		122	3/36	IPL13	Input Polarity TE. 13	0 or 1	1	300
108	WORD	2108	122	9/86	AD108	Dig. Input Polarity	0 - 65535	0	300
109	BIT 2		141	9/09	IST2	Input Status of terminal 2	0 or 1	0	300
109	BIT 3		141	9/10	IST3	Input Status of terminal 3	0 or 1	0	300
109	BIT 4		141	9/11	IST4	Input Status of terminal 4	0 or 1	0	300
109	BIT 5		141	9/12	IST5	Input Status of terminal 5	0 or 1	0	300
109	BIT 6		141	9/13	IST6	Input Status of terminal 6	0 or 1	0	300
109	BIT 7		141	9/14	IST7	Input Status of terminal 7	0 or 1	0	300
109	BIT 8		141	9/15	IST8	Input Status of terminal 8	0 or 1	0	300
109	BIT 9		141	9/16	IST9	Input Status of terminal 9	0 or 1	0	300
109	BIT A		141	9/17	IST10	Input Status of terminal 10	0 or 1	0	300
109	BIT B		141	9/18	IST11	Input Status of terminal 11	0 or 1	0	300
109	BIT C		141	9/19	IST12	Input Status of terminal 12	0 or 1	0	300
109	BIT D		141	9/20	IST13	Input Status of terminal 13	0 or 1	0	300
109	WORD	2109	141	9/87	AD109	Dig. Input Status	0 - 65535	0	300
120	WORD	2120	55	2/09	SETAB	Select Ramp A or B	0 - 15	0	300
121	WORD	2121	56	3/47	AOSEL	Source of Analog Output	0 - 15	1	300
122	WORD	2122	57	3/48	RSEL1	Src. of Ref. Value with Ramp	0 - 15	1	300
123	WORD	2123	58	3/49	RSEL2	Src. of Ref. Value without Ramp	0 - 15	0	300
124	WORD	2124	59	3/50	RSEL3	Rated value, Torque limit	0 - 15	0	300
125	WORD	2125	60	3/51	RSEL4	Source of Reference (Reserved)	0 - 15	0	300
126	WORD	2126	61	3/52	RSEL5	Source of Reference (Reserved)	0 - 15	0	300
127	WORD	2127	62	3/53	RSEL6	Source of Reference (Reserved)	0 - 15	0	300
130	WORD	2130	63	4/12	TRAN1	Transmission Factor n x Value	1 - 64000	1000	300
131	WORD	2131	64	4/13	TRAN2	Transmission Factor n / Value	1 - 64000	1000	300
132	WORD	2132	65	4/16	ANCOR	Angle Adjustment	0 - 65535	0	300
133	WORD	2133	66	4/17	PPR_M	Pulses per Revolution of Master x4	1 - 9999	120	300
134	WORD	2134	67	4/18	KPSLV	Amp. of Sync. Velocity Regulator	0 - 100	1%	300
135	WORD	2135	68	2/15	INCR	Speed + Increase Speed	0 - 9999	0	300
136	WORD	2136	69	2/16	DECR	Speed - Decrease Speed	0 - 9999	0	300
137	WORD	2137	70	4/20	SMOD	Select Slave Mode	0 - 2	1	300
138	WORD	2138	71	4/19	KPAM	Amplifier of Master Accelleration	0 - 100	0	300
140	BYTE 1	2140	72	5/08	AI1OF	Offset of Analog Input 1	0 - 255	0	300
141	BYTE 2	2141	73	5/09	AI1GA	Gain of Analog Input 1	0 - 255	0	300
142	BYTE 1	2142	74	5/10	AI2OF	Offset of Analog Input 2	0 - 255	0	300
143	BYTE 2	2143	75	5/11	AI2GA	Gain of Analog Input 2	0 - 255	0	300
144	BYTE 1	2144	76	5/12	AO_OF	Offset of Analog Output	0 - 255	0	300
145	BYTE 2	2145	77	5/13	AO_GA	Gain of Analog Output	0 - 255	0	300
146	BYTE 1	2146	78	5/14	ID_OF	Offset of Current Display	0 - 255	0	300
147	BYTE 2	2147	79	5/15	ID_GA	Gain of Current Display	0 - 255	0	300
160	WORD	2160	80	2/06	MRACU	Motor Rated Current 30000 ≙ 3000.0A	1 - 30000	0	300
161	WORD	2161	81	2/07	MPECU	Motor Peak Current (Limits IL1Q/IL4Q) 30000 ≙ 3000.0A	1 - 30000	0	300
162	WORD	2162	82	4/21	PULSE	Pulses to end position	1 - 64000	1	300
163	WORD	2163	83	4/22	CORR	Compensate Sensor Dead Time	0 - 9999	0	300
164	WORD	2164	84	2/04	POLES	Poles of Motor	2 - 32	0	300
165	WORD	2165	85	2/13	PHADR	Phase Advance at Rated Speed	0 - 99	30%	300
166	WORD	2166	86	2/03	RATSP	Motor rated Speed (BL-N-motors lower Speed)	0 - 6000	0 min^{-1}	300
167	WORD	2167	87	2/14	PHADM	Phase Advance at Max Speed	0 - 99	50%	300
168	WORD	2168	88	5/04	COBRE	Commutation Break	10 - 50	10	300
170	WORD	2170	89	3/03	SRUN	Input Selection Run	0 - 13	3	300
171	WORD	2171	90	3/05	SDIR	Input Selection Direction (Master)	0 - 13	5	300
172	WORD	2172	91	3/06	SHOLD	Input Selection Hold	0 - 13	6	300
174	WORD	2174	92	3/04	SPRS1	Input Selection Preset 1	0 - 13	4	300
175	WORD	2175	93	3/07	SPRS2	Input Selection Preset 2	0 - 13	7	300
176	WORD	2176	94	3/09	SUP	Input Selection Motorpoti Up	0 - 13	9	300
177	WORD	2177	95	3/10	SDOWN	Input Selection Motorpoti Down	0 - 13	10	300
178	WORD	2178	96	3/08	SMOT	Input Selection Motorpoti	0 - 13	8	300

Sorting after Code/Attribut respectively CANopen Object Index

Code/ Attribut	Data size	CANopen Object Index	Parameter-No. DeviceNet	TAE	Display	Parameter name	Value Range	Initial Value	at Firmware Version
180	WORD	2180	97	3/11	SINC	Input Selection Increase	0 - 13	11	300
181	WORD	2181	98	3/12	SDEC	Input Selection Decrease	0 - 13	12	300
182	WORD	2182	99	3/13	SSLAV	Input Selection Slave	0 - 13	13	300
183	WORD	2183	100	3/02	SRES	Input Selection Reset	0 - 13	2	300
184	WORD	2184	101	3/14	SSPER	Input Selection Suppress speed error	0 - 13	0	300
185	WORD	2185	102	3/15	SSYNC	Input Selection Synchron, Angle or Speed	0 - 13	1	300
186	WORD	2186	103	3/17	SICW	Input Selection Inhibit cw	0 - 13	0	300
187	WORD	2187	104	3/18	SICCW	Input Selection Inhibit ccw	0 - 13	0	300
188	WORD	2188	105	3/19	SSETB	Input Selection Set Ramp B	0 - 13	0	300
189	WORD	2189	106	3/16	SANG	Input Selection Angle Correction	0 - 13	0	300
190	WORD	2190	107	3/20	SLDIR	Input Selection Slave Direction	0 - 13	0	300
191	WORD	2191	108	3/21	STQL	Input Selection Torque limit	0 - 13	0	333
192	WORD	2192	109	3/22	SSER	Input Selection Set External Error	0 - 13	0	333
193	WORD	2193	110	3/23	SSDC	Input Selection Set Disable Controller	0 - 13	0	300
194	WORD	2194	111	3/24	STLAP	Input Selection T-Limit Ana/Prog	0 - 13	0	300
200	BYTE 1	2200	-	3/56	PP0R	Profibus Parameter 0 read	0 - 255	0	402
201	BYTE 2	2201	-	3/57	PP0W	Profibus Parameter 0 write	0 - 255	0	402
202	BYTE 1	2202	-	3/58	PP1R	Profibus Parameter 1 read	0 - 255	0	402
203	BYTE 2	2203	-	3/59	PP1W	Profibus Parameter 1 write	0 - 255	0	402
204	BYTE 1	2204	-	3/60	PP2R	Profibus Parameter 2 read	0 - 255	0	402
205	BYTE 2	2205	-	3/61	PP2W	Profibus Parameter 2 write	0 - 255	0	402
206	BYTE 1	2206	-	3/62	PP3R	Profibus Parameter 3 read	0 - 255	0	402
207	BYTE 2	2207	-	3/63	PP3W	Profibus Parameter 3 write	0 - 255	0	402
208	BYTE 1	2208	-	3/64	PP4R	Profibus Parameter 4 read	0 - 255	0	402
209	BYTE 2	2209	-	3/65	PP4W	Profibus Parameter 4 write	0 - 255	0	402
210	BYTE 1	2210	-	3/66	PP5R	Profibus Parameter 5 read	0 - 255	0	402
211	BYTE 2	2211	-	3/67	PP5W	Profibus Parameter 5 write	0 - 255	0	402
212	BYTE 1	2212	-	3/68	PP6R	Profibus Parameter 6 read	0 - 255	0	402
213	BYTE 2	2213	-	3/69	PP6W	Profibus Parameter 6 write	0 - 255	0	402
214	BYTE 1	2214	-	3/70	PP7R	Profibus Parameter 7 read	0 - 255	0	402
215	BYTE 2	2215	-	3/71	PP7W	Profibus Parameter 7 write	0 - 255	0	402
216	WORD	2216	112	2/26	PTQL	Programable Torque limit 1000 ≙ 100.0%	0 - 1000	1000	412
217	BIT 0		113	9/66	DICON	Set Disable Controller (Command)	0 or 1	0	413
217	BIT 1		113	9/67	TLAP	Set T-Limit Analog/Prog (Command)	0 or 1	0	413
217	BIT 5		113	3/80	INVCD	Invert Counter dir when Pos-Off (Command)	0 - 1	0	423
217	BIT 7		113	3/79	ENPOS	Enable positioning (Command)	0 - 1	0	417
217	BIT 8		113	3/74	STPOS	Go to 1st position (Command)	0 - 1	0	417
217	BIT 9		113	3/75	BRCUR	Type of Break curve Ramp/Scurve (Command)	0 - 1	0	417
217	BIT C		113	3/76	REPOS	Reset Position (Command)	0 - 1	0	417
217	BIT D		113	3/77	REFPO	Define direction of position (Command)	0 - 1	0	417
217	BIT E		113	3/78	GSPOS	Go to Start position (Command)	0 - 1	0	417
217	WORD	2217	113	5/18	CONT2	Control2	0 - 65535	0	300
218	BIT 0		133	9/68	DICON	Set Disable Controller (Status)	0 or 1	0	413
218	BIT 1		133	9/69	TLAP	Set T-Limit Analog/Prog (Status)	0 or 1	0	413
218	BIT 2		133	9/70	POLSR	Leadspeed is reached (Status)	0 or 1	0	417
218	BIT 3		133	9/71	POSNO	Position is Not Ok (Over) (Status)	0 or 1	0	417
218	BIT 4		133	9/72	RPOSR	Reference position is reached (Status)	0 or 1	0	417
218	BIT 5		133	9/76	INVCD	Invert Counter dir when Pos-Off (Status)	0 or 1	0	423
218	BIT 6		133	9/73	HLPOS	Hold position in Position controller (Status)	0 or 1	0	417
218	BIT A		133	9/74	POSOK	Position is Ok (Status)	0 or 1	0	417
218	BIT B		133	9/75	DMFRQ	Block mater frequence (Status)	0 or 1	0	417
218	WORD	2218	133	9/88	AD218	Control2 Status	0 - 65535	0	413
219	WORD	2219	114	2/27	MPTUL	Motorpoti transmission limit (UP)	0 - 100	0%	414
220	WORD	2220	115	2/28	MPTDL	Motorpoti transmission limit (DOWN)	0 - 100	0%	414
221	WORD	2221	116	2/34	MPOSP	Position maximum speed	0 - 6000	100 min^{-1}	417
222	WORD	2222	117	2/35	WINPO	position window (pulses/revolution x4)	1 - 255	30	417
223	WORD	2223	118	2/36	KPP_P	proportional Amplifier for Positioning	0 - 255	75	417
224	WORD	2224	119	2/29	DEC_C	Deceleration Time C 5999 ≙ 599.9s	1 - 5999	1800	417
225	WORD	2225	120	2/37	ADJBC	Adjust start of breaking curve 1000 ≙ 100.0s	1 - 1000	10	417
226	WORD	2226	-	5/16	AJTRC	Adjust Torque regulation curve	0 - 1000	10	422

We reserve the right to correct technical and printing errors.

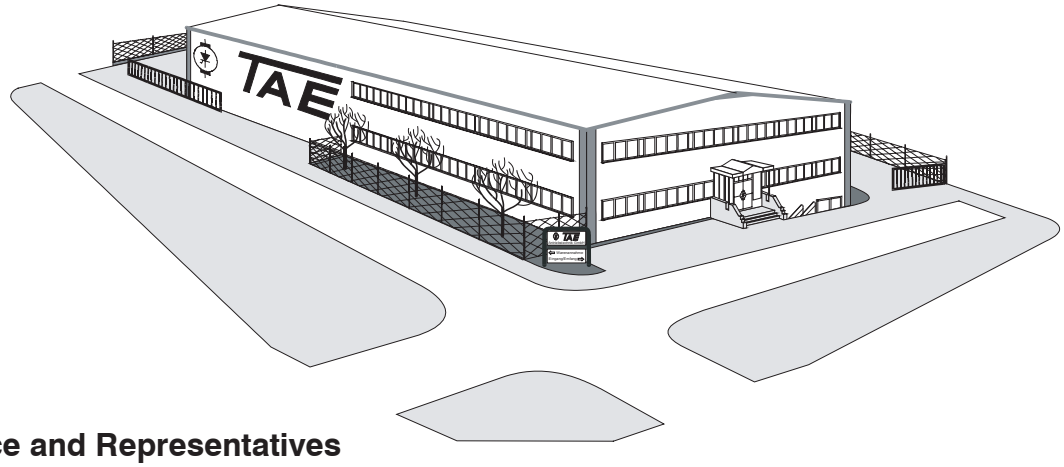

Head Office and Representatives

Head Office

Germany

Shipping adress:

TAE Antriebstechnik GmbH
Am Kappengraben 20
D-61273 Wehrheim

P.O. Box address:

TAE Antriebstechnik GmbH
Postfach 1163
D-61268 Wehrheim

E-mail:

info@tae-antriebstechnik.de

Internet:

http://www.tae-antriebstechnik.de

Telephone: +49 60 81 95 13-0
Fax purchase dept.: +49 60 81 5 94 72
Fax sales dept.: +49 60 81 980052

Representatives - Germany

Erhardt Antriebstechnik GmbH
Silcherstraße 8
D-71691 Freiberg a.N.
Telephone: +49 71 41 7 23 79
Fax: +49 71 41 707457

International Sales Representatives

Belgium

ESCO Transmission
Culliganlaan, 3
B-1831 Machelen Diegem
Telephone: +32 2 715 65 60
Fax: +32 2 721 28 27

Denmark

Thrige Electric A/S
Energivej 25
DK-5260 Odense S
Telephone: +45 63 95 11 11
Fax: +45 63 95 11 12

Finland

Finndrive Qy
Sirrikuja 4 E
FIN-00940 Helsinki
Telephone: +358 9 342 1543
Fax: +358 9 342 1548

France

Radio Energie,
ZAC Fontaine de Jouvence
3, Rue Joly de Bammeville
F-91 462 Marcoussis Cedex
Telephone: +33 1 69 80 67 04
Fax: +33 1 69 80 67 08

SB Automation
ZAE les Glaises
3, allée des garays
F-91872 Palaiseau Cedex
Telephone: +33 1 69 32 01 03
Fax: +33 1 69 32 01 04

Netherlands

GTI-Elektroprojekt
Sluispolder Vej 15
NL-1505 EK Zaandam
Telephone: +31 75 68 11 111
Fax: +31 75 63 54 003

Elektro Drive B.V.
1e Dwarstocht 14
NL-1500 EB Zaandam
Telephone: +31 75 61 66 656
Fax: +31 75 61 79 500

USA

MSI - Motor Systems, Inc
501 TechneCenter Drive
Milford Ohio 45150
Telephone: +1 513 576 1725
Fax: +1 513 576 1915

South America

IFAVEN, C. A.
Apartado 120
Postal 2101 Maracay, Aragua
Venezuela
Telephone: +58 243 553 2330
Fax: +58 243 553 2330

Taiwan

An Fam Enterprise Co., Ltd.
12 Fl. No. 133 Sec. 1, Pei Hsin Road
Hsin Tien City, Taipei
Telephone: +2 2915-5908
Fax: +2 2915-5912